DIESEL ENGINES

By

B. J. VON BONGART

CONSULTING ENGINEER

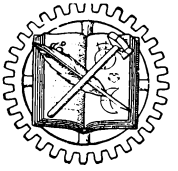

NEW YORK

D. VAN NOSTRAND COMPANY, INC.

250 FOURTH AVENUE

1938

COPYRIGHT, 1938
BY D. VAN NOSTRAND COMPANY, INC.

All Rights Reserved

This book or any part thereof may not be reproduced in any form without written permission from the publisher.

PRINTED IN U. S. A.

PRESS OF
BRAUNWORTH & CO., INC.
BUILDERS OF BOOKS
BRIDGEPORT, CONN.

Diesel, von Krupp and the M.A.N. set out to create a coal-dust engine, a prime mover that would burn a then almost worthless native German fuel.

Much against their wish and will, they found themselves sponsoring an engine demanding foreign oil—the unexplainable irony of fate . . .

PREFACE

THIS BOOK contains information assembled as a result of the author's work and experience as consultant in the field of Diesel engines. The researches of others have been included, however, to widen the scope as a textbook and it is hoped that proper credit has been extended, in every case, to the sources.

The book is primarily designed as a text for the study of internal combustion engines of the compression-ignition (i.e., the Diesel) type. It should also be of use to the layman who wishes to familiarize himself with this modern prime mover, low in operating costs and adaptable to many applications in various fields. The engineer and the technician actively engaged in the Diesel industry may find of value the research work summarized in the following pages, especially that relating to fuel atomization, combustion phenomena and chamber design, aspects of Diesel engine design still obscure to many.

Some may question the conclusions which the author has drawn or inferred from his discussion of various topics. However, the engineer or technician who follows the lines indicated by modern research and not alone those based on accepted practice, should find little with which to disagree.

It is probable that research in the field is still in its infancy and that the development of the truly high-speed Diesel is a task which will evolve upon today's students. If the contents of this book impart an appreciation of the present accomplishments in the Diesel field, as well as the knowledge and understanding of the fundamentals involved, it will have served its purpose well.

The author is indebted to Dr. James H. Pitman, who has so unselfishly assisted in the sifting and selection of primary source material, and to Professor K. W. Stinson of Ohio State University and Professor C. H. Kent of the College of the City of New York for their able editing and contributions to the contents of the book.

B. J. VON B.

New York, N. Y.
May, 1938.

CONTENTS

CHAPTER		PAGE
I.	HISTORY OF THE DIESEL ENGINE	1
II.	THERMODYNAMICS	7
III.	COMBUSTION	28
IV.	FUEL OILS	41
V.	FUEL ATOMIZATION	57
VI.	FUEL PUMPS	78
VII.	FUEL INJECTION NOZZLES	105
VIII.	COMMON RAIL AND AIR INJECTION SYSTEMS	125
IX.	COMBUSTION CHAMBER DESIGNS	137
X.	AUTOMOTIVE DIESEL ENGINES	184
XI.	AIRCRAFT DIESEL ENGINES	219
XII.	MEDIUM AND LOW-SPEED DIESEL ENGINES	245
XIII.	SUPERCHARGERS	272
XIV.	DIESEL ENGINE DESIGN FEATURES	282
XV.	MISCELLANEOUS	309
	APPENDIX	327
	BIBLIOGRAPHY	329
	INDEX	331

INTRODUCTION

Diesel engines have for years met the requirements of stationary power, of marine power and of portable power units. Today they are being commonly used in heavy duty tractors, and are entering the truck and bus field. Much development work is being done on Diesels for automobiles, and while none have been introduced in the United States, there are several makes available in Europe.

While the slow-speed engines are well developed, the medium and high-speed engines are still presenting many problems. The principles of operation are approximately the same for all sizes of Diesel engines; and since the main problems facing the young Diesel engineer are found in the high-speed class, this text will deal chiefly with high-speed Diesel engines.

Automotive and railcar Diesels have been in use in Europe for several years, while recently they have come into prominence in the United States. This has been due mainly to the higher cost of gasoline in Europe, which has offered a greater incentive for high-speed Diesel development. This price advantage cannot justify a trend to Diesel engines for automotive equipment in the United States, since the fuel tax applies to fuel oil as well as gasoline. Thus, the advantage is reduced to an average of about seven cents per gallon. It should also be remembered that this price difference may be expected to disappear as the demand for fuel oil increases.

The Diesel engine possesses other advantages over the gasoline engine besides fuel cost. At full load the Diesel engine is at least ten percent more efficient than the gasoline engine, while at partial loads the gain is much more pronounced. Also at low engine speeds the Diesel is better able to maintain a high torque. The Diesel engine may also be adapted to use a wide variety of fuels, other than petroleum products, such as cocoanut oil, soy bean oil, castor oil or even fish oil. These fuels are available in many foreign countries

where petroleum products either are not available or are very expensive.

Another important advantage of the Diesel engine is the reduction of fire hazard by the elimination of gasoline and the electric ignition system. This is of particular importance in the marine and aeronautical fields.

It must be remembered that the gasoline engine has reached a high stage of development, besides possessing certain natural advantages, which Diesel engines, at least thus far, can not rival. But the Diesel has its own natural advantages, and is, moreover, making definite advances in the high-speed field.

The principal objection to the Diesel engine for automobiles is the roughness, the lack of smooth rhythm, in its operation. Much of this roughness is due to the high compression ratios which are often as high as 18 to 1 and even 21 to 1. Some of it is also caused by the attempts to obtain quick burning of the fuel with resultant high cylinder pressures. Recent combustion chamber development has done much to cure this objection and still produce an efficient engine with high mean effective pressure. The advantage of the six and eight cylinder engines over the four cylinder is more marked in the Diesel than in the gasoline engines in obtaining smooth performance.

While railroad, aviation and marine service require maximum engine speeds of 1000 to 2000 r.p.m., the engines for highway service should have maximum speeds of at least 3000 to 3600 r.p.m., and at the same time be capable of idling at not over 350 r.p.m. This speed range is desirable for successful competition with the present gasoline automotive engines, which have a speed range from 400 to about 4000 r.p.m.

Present development indicates that these speeds are attainable, but most of the engines produced to date are sluggish in their response to the throttle at low and high speeds, while at medium speeds they are very flexible. This is one of the serious problems still facing the Diesel engineer.

Another objection to the automotive Diesel engine is the higher initial and maintenance costs. These can partially be overcome by greater production, and further development and experience.

It has been the aim of the author to include examples of the various types of construction, of particularly those representative of modern Diesel engine practice, especially in the medium and high-speed fields. Space will not permit the inclusion of a description of the construction of all modern Diesel engines.

DIESEL ENGINES

CHAPTER I

HISTORY OF THE DIESEL ENGINE

A definition of the Diesel Engine may best be found in the words of Dr. Diesel:—

> "The fuelless compression of a charge of air far beyond the self-ignition temperature of the fuel, and the injection and hence instantaneous ignition of the fuel in this highly compressed and hot air, is the essence of a Diesel engine."

While this statement sets forth Diesel's conception of his engine, the practical development of the engine is based on previous ideas and accomplishments. A brief résumé is, therefore, deemed desirable before discussing the developments of Dr. Diesel.

HUYGHENS, 1680.

The origin of the internal combustion engine is generally credited to Huyghens. He proposed an engine using gunpowder. A small quantity was exploded in a large cylindrical vessel; this drove out the air through check valves. Upon cooling, a partial vacuum was created and atmospheric pressure drove a piston to the bottom of the vessel.

STREET, 1794.

The first engine utilizing a gaseous mixture is credited to Street. An inverted cylinder with a movable piston was used. The bottom of the cylinder was heated by a fire; a few drops of spirits of turpentine were introduced and evaporated, the piston was drawn up a short distance to pull in air for combustion, and the mixture was then ignited by a flame at an open touchhole. The piston was forced up, delivering power to operate a pump.

LEBON, 1799.

The first engine employing compression of the initial charge was described by Lebon, a French engineer. Although the details of the engine are not available, it is known that it employed a cycle much different from any used in later engines.

CARNOT, 1824.

Many of the fundamental ideas which were later to be incorporated in the successful internal combustion engines were suggested by Sadi Carnot, a young French engineer:

1. *Self-ignition of fuel in highly compressed air.* He stated that air compressed to a ratio of 15 to 1 would reach a temperature (572° F.) sufficient to ignite dry wood (punk).
2. *Compression of the air before ignition.* In discussing an experimental coal dust engine, Carnot suggested high pressure combustion rather than atmospheric combustion. He proposed that the fuel be added at the end of compression by "an easily invented injector." This idea was somewhat similar to that of Lebon.
3. *Means of cooling engine cylinder.* Carnot realized that the cylinder walls would require cooling to permit continuous operation.
4. *Utilization of exhaust heat.* Over 100 years after Carnot's suggestion that the engine exhaust be passed under a water boiler, we find this principle being applied for industrial heating and processing.

Carnot also proposed the heat engine cycle, which is looked upon as the ultimate theoretical aim in engine design and operation.

Because of his untimely death at the age of 37, his ideas were not seriously considered for many years.

BARNETT, 1838.

Barnett is credited with two important inventions. The first was an improved ignition device which consisted of a rotary valve with one port connecting the combustion chamber and the other leading to the atmosphere. The valve was rotated to the latter opening where a flame ignited a gas jet inside the valve. At the time of igni-

tion, the valve opened to the combustion chamber and the flame in the valve ignited the charge in the cylinder.

His other invention was the "compression system," now used on all internal combustion engines. He designed both single and double acting engines using this system. A gas pump and an air pump were used to deliver the charge to the power cylinder. The first engine had no additional compression in the cylinder beyond that delivered by the charging pumps; however, in a later engine the incoming charge was used to blow out the exhaust gases and then compression was obtained from the main piston.

BARSANTI & MATTEUCCI, 1857.

This was the first free-piston engine ever proposed. As the name implies, the explosion acted upon a freely moving piston. A very long inverted vertical cylinder was used. When the explosion occurred, the piston was moved up until the power of the explosion was expended. The expansion and cooling of the gases caused a partial vacuum in the cylinder, with the result that the piston moved down due to its weight and atmospheric pressure on top of it. When the piston moved down, a ratchet engaged the piston rod and the engine shaft, and thus power was transmitted.

The pioneers in the internal combustion field that have been mentioned, along with many others, must be given much credit for their development work and ideas. However, none of their engines ever got beyond the experimental stages.

LANOIR, 1860.

To the Frenchman, Lanoir, must go the credit for producing the first commercial internal combustion engine. The piston pulled in a charge of gas and air during the first part of the stroke. The charge was then ignited by an electric spark, and the piston was pushed to the end of its stroke. On the return stroke, the exhaust gases were pushed out.

The engine was very smooth in operation, but had one very marked disadvantage,—the thermal efficiency was only about 4 per cent. This was chiefly due to the fact that combustion occurred at atmospheric pressure.

BEAU DE ROCHAS, 1862.

The following conditions were suggested by Beau de Rochas for the improvement of internal combustion engine economy:—

1. The greatest possible cylinder volume with the least possible cooling surface;
2. The greatest possible rapidity of expansion;
3. The greatest possible expansion; and
4. The greatest possible pressure at the commencement of expansion.

He stated that an important factor in obtaining the best results would be the use of "the Beau de Rochas" four-stroke-cycle principle of operation:—

1. Suction during an entire outstroke of the piston.
2. Compression during the following instroke.
3. Ignition at dead center and expansion during the third stroke.
4. Forcing out of the burned gases from the cylinder on the fourth and last return stroke.

He proposed to obtain ignition by the increase of temperature due to compression. This he expected to obtain by compressing the charge to one-fourth of the original volume. We know this to be impossible.

OTTO, 1867.

In cooperation with Langen, a successful free-piston engine, very similar to the invention of Barsanti and Matteucci, was built and exhibited at the Paris Exposition. Flame ignition was used on this engine. Although the engine was very noisy and rough in operation, the fact that the thermal efficiency was about 12 per cent caused it to be a commercial success. The engine was very bulky and was built only in small sizes, varying from ½ to 3 brake horsepower.

In 1876, Otto built what was known as the "Otto Silent" gas engine. When Otto applied for a patent for this engine, which worked on the "Otto four-cycle principle," he discovered that the same principle had been proposed by Beau de Rochas years before. This engine resembled the present single-acting horizontal gas and oil engines. Flame ignition was used and the engine had a 16 per

cent thermal efficiency. It was a very popular engine for many years.

CLERK, 1881.

For several years Clerk had already worked on the development of a gas engine operating with a power impulse for every two strokes of the piston. The gas and air were, however, compressed fully in a separate cylinder. In 1881 he built the first engine to operate on the two-stroke cycle, which is sometimes known as the Clerk Cycle. A separate cylinder was used to compress the gas and air to about 4 lb. per sq. in. and the entering charge displaced the exhaust gases through ports uncovered by the piston. The new charge was then compressed on the return stroke of the piston and ignited by a platinum igniter.

PRIESTMAN, 1885.

The need for an engine which would operate on liquid fuel caused Otto and others to experiment with such an engine. They produced engines which operated on gasoline, which then was a by-product of kerosene. Hock built a petroleum engine in Austria in 1870, but the first marketable oil engine was built by Priestman. This engine, operated on the so-called Otto cycle, had a spray vaporizer and employed spark ignition.

HARGREAVES, 1885–8.

At about this same time Hargreaves developed an engine of 40 b.hp. at 100 r.p.m. with a fuel consumption of 0.53 lb. of coal tar oil per b.hp. hr. The compression pressure of this engine was 75 lb. per sq. in. and it was a glow-head or hot-head type. The fuel was injected through a spring-loaded valve, by the oil pressure. This injection valve had been patented by Hargreaves previously.

ACKROYD-STUART, 1890.

A British patent was granted Mr. Ackroyd-Stuart covering the following claims:—

> "Means for preventing the premature explosion or pre-ignition of an explosive charge of combustible vapor or gas and air when a permanent igniter . . . such as a continuous spark or a highly heated igniting chamber . . . is in communication

with the interior of the cylinder, by first of all compressing the necessary quantity of air for the charge and then introducing into this quantity of compressed air the necessary supply of combustible liquid, vapor or gas to produce the explosive mixture."

The engine covered by this patent was known as the Hornsby-Ackroyd. It utilized the idea of igniting and vaporizing the oil by means of the hot walls of the combustion chamber. This chamber was connected to the cylinder by a small passage. This separate chamber was heated by an outside flame for starting. The fuel was injected into this heated chamber, the cylinder taking in and compressing only air. The engine operated on the four-stroke-cycle principle.

Although no attempt was made in this engine to obtain ignition by the high temperature of the compressed air, many features common to the present Diesel engine are evident: (a) the compression of air without fuel, (b) the pre-combustion chamber, and (c) the injection of liquid fuel into the pre-combustion chamber near the end of the compression stroke.

DIESEL, 1892.

The original patent of Dr. Rudolf Diesel advocated an engine applying many principles already proposed by Carnot:—

A working procedure for combustion engines defined as follows: in a cylinder, clean air or any gas (i.e. vapor) is compressed by means of a working piston to such an extent that the temperature thus reached exceeds by far the ignition-temperature of the fuel used whereupon the fuel injection, from top-dead-center on, takes place so gradually that the combustion, due to the outward moving piston and the resulting expansion of the compressed air (i.e. gases), takes place without material pressure or temperature rise whereupon, after stopping the fuel injection, the further expansion of the gas-mass takes place within the cylinder.

Other claims in this patent pertained to the use of an air cell, and the injection of water. The next year Dr. Diesel obtained another patent for the control of engine power by varying the speed of fuel injection. He suggested that the result would be approxi-

mately constant pressure combustion, and not constant temperature as in the Carnot cycle. The idea of air injection was also proposed.

In 1893, Diesel entered into contracts with the M.A.N. (Maschinenfabrik Augsburg-Nürnberg) and the Krupp Works for the development and manufacture of his engines. The first attempts were to develop a coal-dust engine. The engine was not successful and the idea was abandoned in favor of a fuel-oil engine, although a coal-dust engine would have been preferred since Germany had much coal and no petroleum.

The first Diesel engines were failures, chiefly due to the absence of a means of cooling the cylinder. Diesel had hoped to utilize all of the heat. Another difficulty was the attempt to reach a compression pressure of 1500 lb. per sq. in.

The third engine, Fig. 1, was built in 1895, used a compression pressure of about 450 lb per sq. in, and was provided with water cooling and functioned satisfactorily. The fuel was injected by a blast of high pressure air (air injection).

One of these experimental engines gave a fuel consumption of 0.54 lb. per b.hp. hr. They all worked on the four-cycle principle.

Much opposition was experienced in Germany to the Diesel fuel oil engine, since it required imported fuel. As a result most of the early engines were manufactured under license in Great Britain, Switzerland and the United States.

In 1910, Diesel, in conjunction with a French manufacturer, constructed the first Diesel engined automobile. The engine delivered 30 b.hp. at 600 r.p.m. and was of the air injection type. It was deemed a failure, due to lack of flexibility required for the variable load and road conditions. This lack of flexibility was mostly due to the air injection system. Mechanical fuel pumps had been thought of, but it was several years before they were developed by Lang, Hesselman and others.

Diesel was the recipient of much opposition and criticism, even after his untimely death in 1913. However, one cannot help but pay him homage. Although it is true that he did not contribute a single new idea, he did develop old ideas and combine them into a practical useful whole.

The present development of the Diesel engine for high speeds has caused the nearly universal use of precombustion chambers in one form or another. This has been done in order to obtain quick

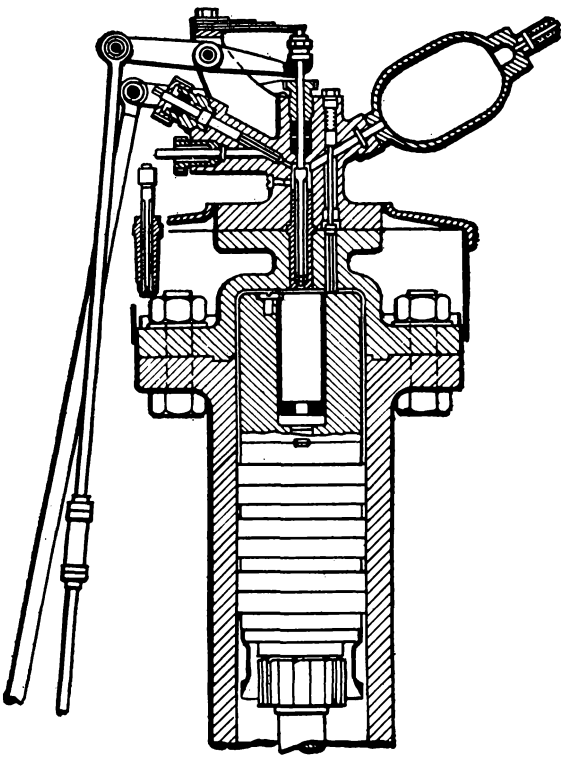

FIG. 1.—First Successful Diesel Engine.

burning of the charge, and at the same time to avoid the high maximum cylinder pressures of the open combustion chamber. Most of these chambers are heat insulated so as to act as catalytic igniters.

Chapter 2

THERMODYNAMICS

A fundamental knowledge of Thermodynamics is assumed, and only those portions of the subject which pertain to Diesel engine operation will be considered here.

Air Standard Cycles. The cycle (1-4-6-7), shown in Fig. 2 represents what is normally thought of as being the ideal Diesel cycle, and the comparison is often made of an actual engine diagram to this ideal cycle using air, as a measure of the actual engine efficiency. However, the ideal Diesel cycle does not represent the condition existing in a Diesel cylinder. If we assume a compression pressure of 450 lb. per sq. in., the maximum pressure of combustion will be about 800 lb. per sq. in. even in a low speed engine, while a high speed engine may have a maximum pressure of over 1200 lb. per sq. in. In even the high speed Diesel engine we will generally have a small portion of the combustion taking place at approximately constant pressure, but much takes place at approximately constant volume.

In reality the Diesel engine approximates what is generally called the Modified Otto-Diesel Cycle where part of the combustion takes place at constant volume as in the Otto Cycle and the remainder at constant pressure as in the Diesel Cycle. In Fig. 2 is shown the superimposed diagrams of these three ideal cycles. For the sake of comparison, the same maximum pressure has been assumed for all diagrams.

In this diagram the ideal Otto cycle is represented by 1-2-6-7, the ideal Diesel cycle by 1-4-6-7 and the Modified Otto-Diesel by 1-3-5-6-7. The compression and expansion curves are assumed to be adiabatic on all these air standard cycles.

Air Standard Efficiencies. In the Modified cycle the heat added during the constant volume process from 3 to 5 may be represented by

$$Q'_1 = M\gamma_v (T_5 - T_3) \tag{1}$$

and that added during the constant-pressure process from 5 to 6 by

$$Q''_1 = M\gamma_p (T_6 - T_5) \tag{2}$$

where M = the number of Mols of air, γ_v = the specific heat at constant volume in B.t.u. per mol. per degree fahrenheit, γ_p = the

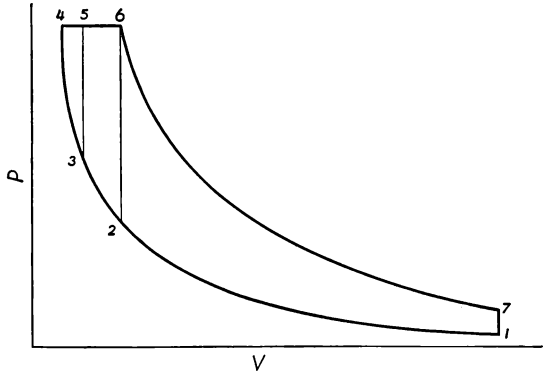

FIG. 2.—*PV* Diagram of Air Standard Cycles.

specific heat at constant pressure, and T = the absolute temperature of the air at any point in degrees fahrenheit absolute.

The total heat added is then

$$Q_1 = M\gamma_v(T_5 - T_3) + M\gamma_p (T_6 - T_5) \tag{3}$$

this is based on the assumption that there is the same number of mols in the cylinder throughout the combustion process.

The heat rejected along the path 7-1 is

$$Q_2 = M\gamma_v (T_7 - T_1) \tag{4}$$

The work done is

$$W = Q_1 - Q_2$$

and the efficiency is

$$\eta_m = \frac{Q_1 - Q_2}{Q_1}$$

by substituting the values given

$$\eta_m = 1 - \frac{T_7 - T_1}{(T_5 - T_3) + K(T_6 - T_5)} \tag{5}$$

where K is the ratio of specific heats $= \frac{\gamma_p}{\gamma_v}$.

Let the ratio of pressure rise $\frac{P_5}{P_3} = G$, the cut-off ratio $\frac{V_6}{V_5} = R$, and the compression ratio $\frac{V_1}{V_3} = r = \frac{V_7}{V_5}$.

Now
$$T_3 = T_1 r^{k-1}$$
$$T_5 = T_3 G = T_1 G r^{k-1}$$
$$T_6 = T_5 R = T_1 G R r^{k-1}$$
$$T_7 = T_6 \left(\frac{V_6}{V_7}\right)^{k-1} = T_6 \left(\frac{V_5 R}{V_7}\right)^{k-1} = T_6 \left(\frac{R}{r}\right)^{k-1}$$
$$= T_1 G R^{k-1} \left(\frac{R}{r}\right)^{k-1} = T_1 G R^k$$

By replacing each temperature in equation (5) with its equivalent in terms of T_1, the equation for the efficiency of the modified cycle becomes

$$\eta_m = 1 - \frac{1}{r^{(k-1)}} \left(\frac{GR^k - 1}{G - 1 + kG(R - 1)}\right) \tag{6}$$

In the ideal Diesel cycle, $G = \frac{P_5}{P_3}$ becomes unity. By eliminating G from equation (6), the efficiency of the Diesel cycle then becomes

$$\eta_D = 1 - \frac{1}{r^{(k-1)}} \left(\frac{R^k - 1}{k(R - 1)}\right) \tag{7}$$

In the ideal Otto cycle, $R = \frac{V_6}{V_5}$ becomes unity, and by eliminating R from equation (6), the efficiency of the Otto cycle becomes

$$\eta_O = 1 - \frac{1}{r^{(k-1)}}. \tag{8}$$

From equations (6), (7), and (8) it can be shown that, for any given compression ratio, the air standard efficiency for the Otto cycle is the highest, while that for the Diesel cycle is the lowest. However, the Diesel engine operates at much higher compression ratios than the Otto engine and, as a result, the Diesel efficiency is higher than the Otto in their respective operating ranges.

Compression. The compression taking place in a theoretical Diesel engine cylinder is adiabatic, since no heat is added or removed from the compressed air and the compression causes an increase of both the pressure and the temperature of the air. The relation between the pressure of air and its volume when compressed adiabatically may be stated

$$PV^{1.4} = \text{a constant} \tag{9}$$

where P = absolute pressure in lb. per sq. ft.
V = volume in cu. ft.

The temperature at the end of the adiabatic compression of a *sensibly perfect gas* may be written

$$PV = MRT \tag{10}$$

M being the weight of the gas in pounds; R a constant for any sensibly perfect gas (the value is 53.35 for air); P the absolute pressure in lb. per sq. ft.; V the volume in cu. ft.; T the temperature of the gas, ° F. absolute.

In actual practice we find that if the temperature is allowed to rise unchecked during compression and without transfer of heat by either radiation or cooling influences, the pressure rises faster than the volume diminishes; i.e., P_2/P_1 is greater than V_1/V_2. The diagram would show an adiabatic curve, the equation of which is $\frac{P_2}{P_1} = \left(\frac{V_1}{V_2}\right)^k$. The value of k may be determined as follows: If the temperature of 1 lb. of air is to be increased 1° F. at constant pressure, the heat required to accomplish this is the *specific heat at constant pressure.* Included are both the external work of expansion and the internal work of raising the temperature. Regnault states that this value is 0.2375 − 0.0686 (work of expansion) =

0.1689 B.t.u. per lb. This, then, is the *specific heat of air at constant volume.* In adiabatic compression, the exponent k is therefore the ratio of these specific heats, 0.2375/0.1689 = 1.406, usually stated simply 1.4.

In reality, however, the compression in a cylinder is not strictly adiabatic, but polytropic. The final temperature T_2 depends not only upon the original temperature T_1 but also upon the cooling influences of the cylinder walls, leakage past the piston rings, etc.; hence the exponent k is not 1.4 (adiabatic) but for polytropic is called n and may be as low as 1.2, or even less under unfavorable conditions. In actual practice it is safe to consider the value of the exponent n as 1.3 to 1.35.

Table I will give the approximate temperature of T_2 if the initial temperature T_1, the compression ratio r, and the exponent n are known or assumed. The table will also give any one of the other values so long as 3 factors are known or assumed.

Table II will give the final pressure P_2 if the initial pressure P, the compression ratio, and the exponent n are known or assumed. This table also will readily give any one of the 4 values if 3 of the values are known or assumed.

EXAMPLE: Air at a temperature of 75° F. is drawn into a cylinder having a compression ratio of 13:1 and the value of the exponent n be assumed as 1.3. Draw a straight line (see Table I) from 75° (T_1 line) to 1.3 (n line); from the intersection at guide-line L draw another straight line to 13 (r line) and the final temperature may be read on the T_2 line, 745° F.

EXAMPLE: To determine final pressure P_2. Let the initial pressure P_1 be at 13.96 lb. per sq. in. abs. (0.95 atmosphere), let the compression ratio be 13:1, and let the value of the exponent n be assumed of the value of 1.3. Draw a straight line from 1.3 (n line) through 13 (r line) to guide-line L. From the intersection at line L draw a straight line to 13.96 of the P_1 line and read the final pressure P_2, approximately 395 lb. per sq. in. abs. on the P_2 line.

Effect of Initial Temperature on Compression. The minimum temperature at which ignition will take place is about 644° F. A

TABLE I

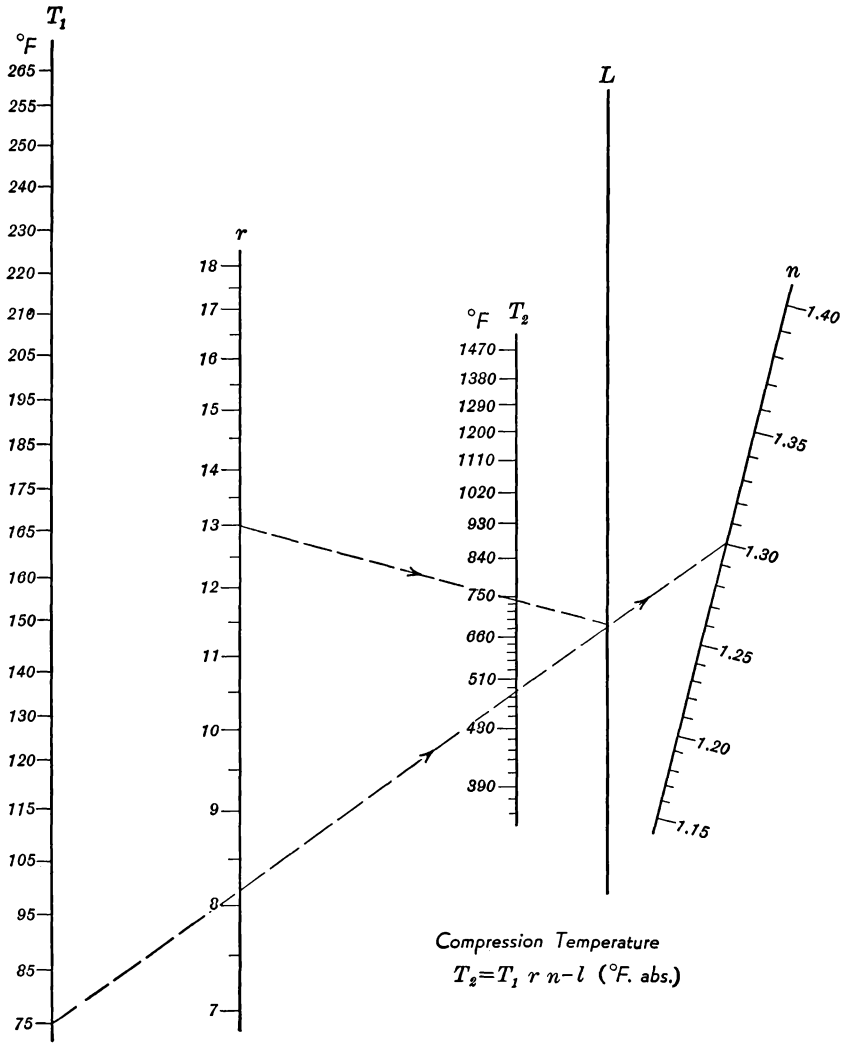

Compression Temperature

$T_2 = T_1\, r^{n-1}$ (°F. abs.)

TABLE II

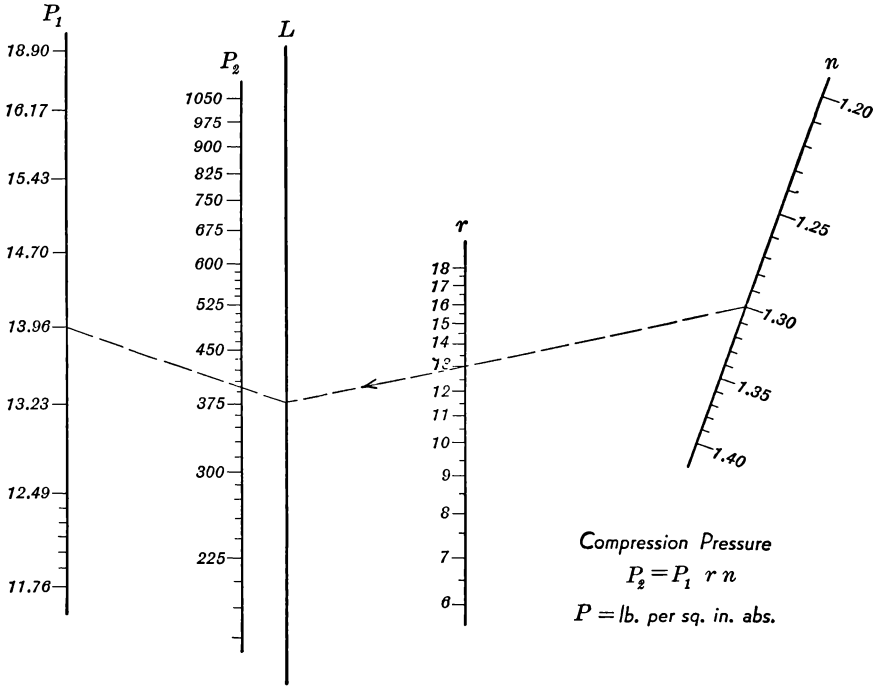

temperature of from 650° to 700° F. is necessary for compression ignition engines, and the equation for compression,

$$\frac{T_2}{T_1} = \left(\frac{P_2}{P_1}\right)^{\frac{n-1}{n}}$$

would express the relation of the pressures and temperatures at the beginning and at the end of the compression stroke.

T_1 = temperature at the beginning of compression (reading 460° F. abs.),
T_2 = final compression temperature, °F. abs.,
P_1 = initial pressure, and
P_2 = final compression pressure in lb. per sq. in., abs.

The pressure-temperature relation in a Diesel engine is shown in Fig. 3. The loss of heat prevents adiabatic compression and the value of n is assumed to be 1.35.

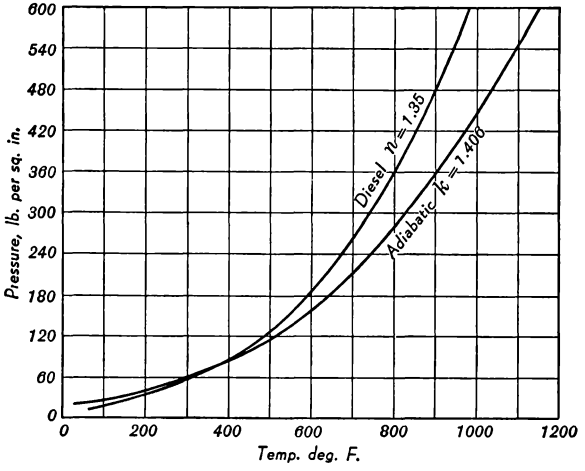

FIG. 3.—Temperature Pressure Relation During Compression.

Since the initial temperature T_1 is of major influence in affecting the final temperature T_2, the equation may be written

$$T_2 = T_1 \left(\frac{P_2}{P_1}\right)^{\frac{n-1}{n}}$$

How the compression ratio, the ratios V_1 (the volume before compression), and V_2 (the clearance volume) affect the final temperature T_2 at various initial temperatures T_1 is shown in Fig. 4.

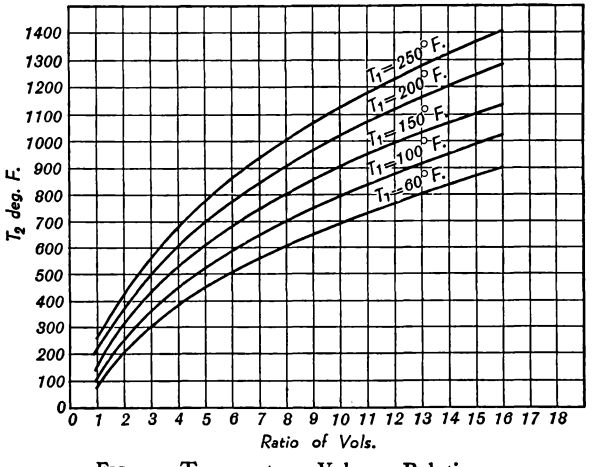

FIG. 4.—Temperature Volume Relation.

We may write

$$T_2 = T_1 \left(\frac{V_1}{V_2}\right)^{n-1}$$

The compression pressure-temperature relation is shown in Fig. 5 for various pressures at several values for the initial temperature, the value for n given as 1.35 being about the best one could expect for Diesel engines. The suction pressure assumed is 14.7 lb. per sq. in. abs. or 0 gauge, which is not actually obtained.

It has been accepted generally that compression pressures of from 450 to 500 lb. per sq. in. are necessary in Diesel engines in

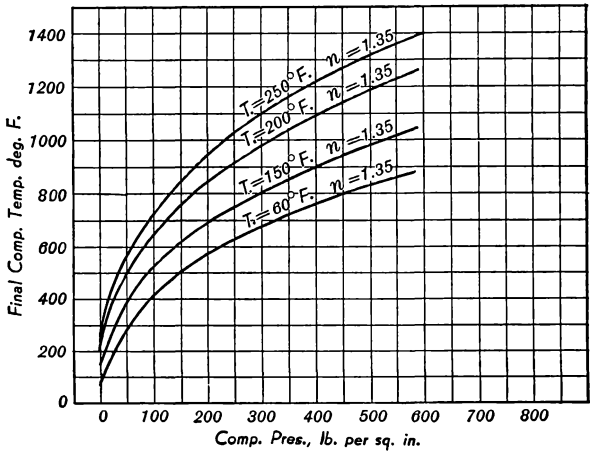

FIG. 5.—Compression Pressure Temperature Relation.

order to assure unfailing compression-ignition. Surprising as it may seem, pressures as low as 350 lb. per sq. in. have created temperatures higher than the ignition point of the fuel oil, and this without recourse to hot surfaces or other means of assisting ignition.

The decisive influence of the temperature T_1 upon the final temperature T_2 has tempted many a designer to pre-heat the inducted air charge (heat from the exhaust manifold etc.) and thus obtain a high final temperature T_2 with a comparatively low compression ratio. But unfortunately, the weight of the inducted air is reduced by pre-heating in a reverse ratio of the final temperature, which can have but one effect, the reduction of the brake-mean-effective-pressure. Diesel engines require a surplus of air for good combustion,

about 1.3 to 2 times the theoretical requirements, and since good combustion is necessary for the realization of a satisfactory b.m.e.p., it is manifest that the pre-heating of the inducted air should not be attempted whenever the atmospheric temperature is 60° F. or over.

When compressing a gas, a change in the final temperature T_2 is equivalent to changing its ability to perform work. We may say

$$PV = MRT \tag{1}$$

or

$$\frac{P_2V_2}{P_2V_1} = \frac{T_2}{T_1} \tag{2}$$

$$\frac{V_1}{V_2} = r, \quad \text{and} \quad \frac{P_2}{P_1} = r^n \tag{3}$$

therefore

$$\frac{T_2}{T_1} = r^n \times \frac{1}{r} = r^{n-1} \tag{4}$$

finally

$$T_2 = T_1 \times r^{n-1} \tag{5}$$

where T_1 = known initial temperature, ° F. abs.
V_1 = total initial volume, cu. ft.
P_1 = initial pressure, lb. per sq. ft. abs.
r = compression ratio.
n = exponent (value 1.20 to 1.35).
R = a constant (value 53.35 for air).
M = the number of Mols of gas (1 Mol being the molecular weight of the gas in pounds).

These equations are based upon the formula for polytropic compressions, which is given in the equation

$$P_1V_1^n = P_2V_2^n \tag{6}$$

where

V_1 = the initial volume, and

V_2 = the final volume,

hence

$$\frac{V_1}{V_2} = r. \tag{7}$$

P_1 and P_2 represent the initial and final compression pressures, then

$$P_2 = P_1 r^n \tag{8}$$

$$\frac{P_2}{P_1} = r^n \tag{9}$$

The final temperatures in ° F. and the final pressures in lb. per sq. in. reached with various compression ratios are shown in Fig. 6.

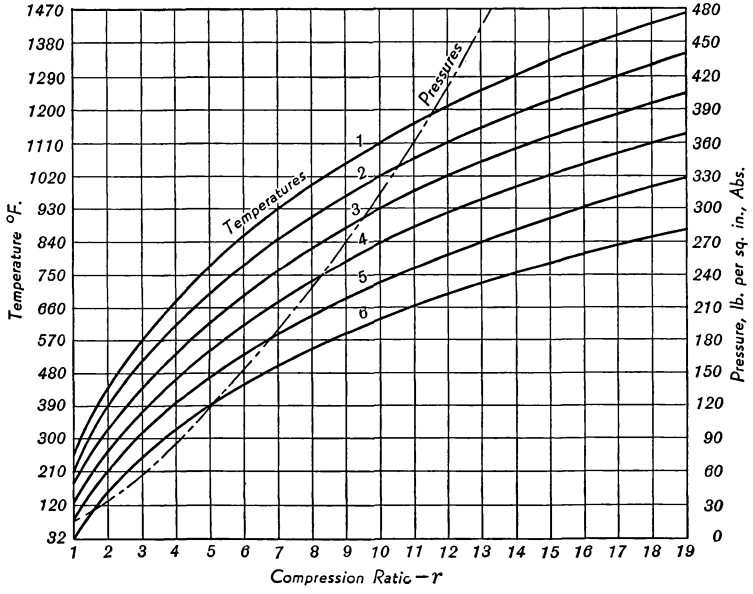

FIG. 6.—Final Temperatures and Pressures of Compression.

The dotted line indicates the pressure reached if the initial pressure P_1 equals 14 lb. per sq. in. abs., and the value of the polytropic exponent n is assumed to be 1.35.

The solid lines show the corresponding variations of temperature in ° F. with initial temperatures varying from 260° F. (curve 1) to 32° F. (curve 6).

Estimating the compression temperatures for various compression ratios from 12:1 to 17:1 and for different values for n, with the initial temperature assumed to be 63° F., the final compression

temperature will depend upon the polytropic exponent n and upon the compression ratio r. The final compression temperatures at various values for n are shown on the chart, Fig. 7.

The ignition temperature of Diesel fuel oils varies from 660° to 840° F., the average value being in the neighborhood of 750° F.

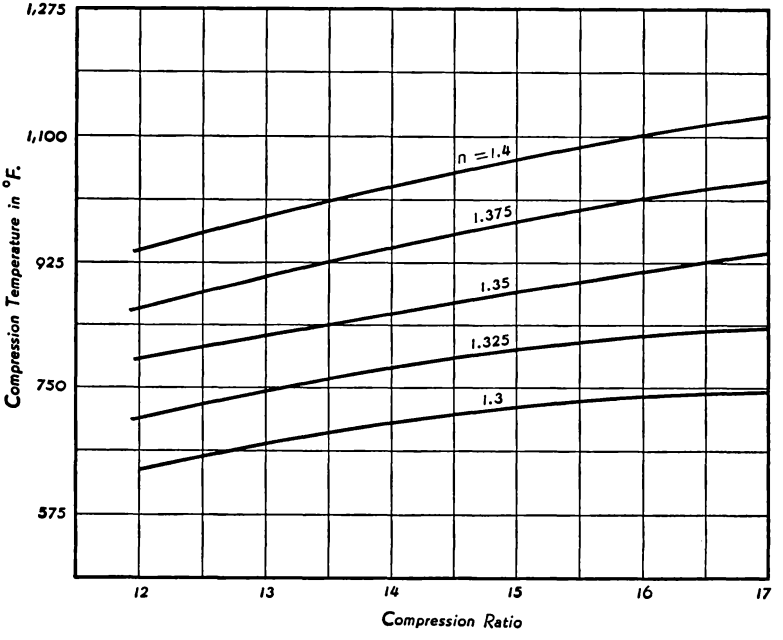

FIG. 7.—Final Compression Temperatures for Various Values of M.

The compression pressure, however, affects the ignition temperature of the fuel in that higher compression pressures lower the ignition temperature of the fuel.

Thermal Efficiency. The thermal efficiency of a Diesel engine is shown in Fig. 8.

It is of note, that the Diesel engine's efficiency is practically uniform at from ¾ load to full load tapering off but slightly towards ½ load.

The British engineer, Harry R. Ricardo, has made some comprehensive tests as to the heat losses of Diesel engines. Fig. 9 illustrates the results obtained.

The engine used by Ricardo was a single cylinder experimental Diesel of the sleeve valve type, 5½ inch bore and 7 inch stroke.

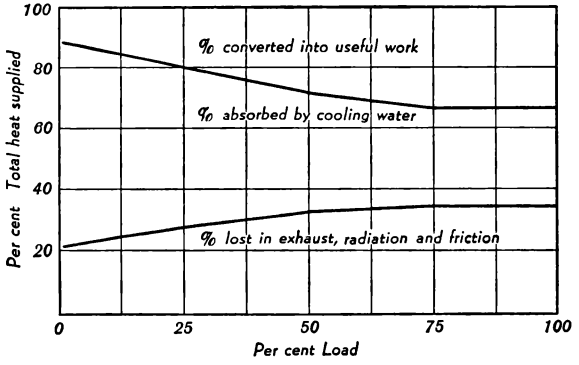

FIG. 8.—Diesel Engine Thermal Efficiency.

The compression ratio was 14 to 1. The normal running speed of this engine was 1,300 r.p.m.; the fuel injection timing was fixed. The observed friction loss was 18 lb. per sq. in. and the maximum pressure was 800 lb. per sq. in. at full load.

The heat loss to the cooling water per b.hp. diminishes from low load to full load; the fuel consumption also diminishes with an increase in load up to nearly full load value. The minimum fuel consumption occurs over a wide range and may be considered as constant from about half load to practically full load.

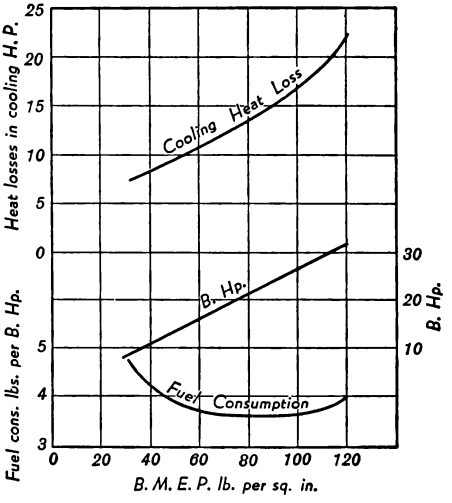

FIG. 9.—Heat Losses of Diesel Engine.

The efficiency of the Mercedes-Benz Diesel engine in comparison with a gasoline engine is shown in Fig. 10.

These figures do not do justice to the modern Diesel engine. While even the Mercedes-Benz Diesel engine shows lower losses

(cooling, exhaust, and radiation) and but a slight increase in friction, the efficiency of 28% is being far surpassed in modern Diesel engines.

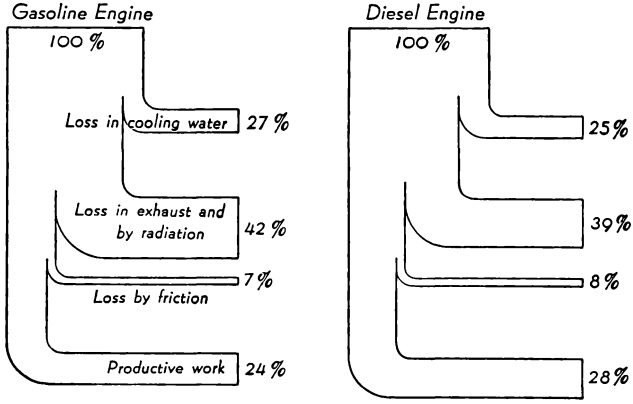

FIG. 10.—Gasoline vs. Diesel Engine.

The Associated Equipment Company of England, makers of the A.E.C. Diesel engine, have made extensive tests of the fuel consumption of gasoline and Diesel engines. The findings are shown in Fig. 11.

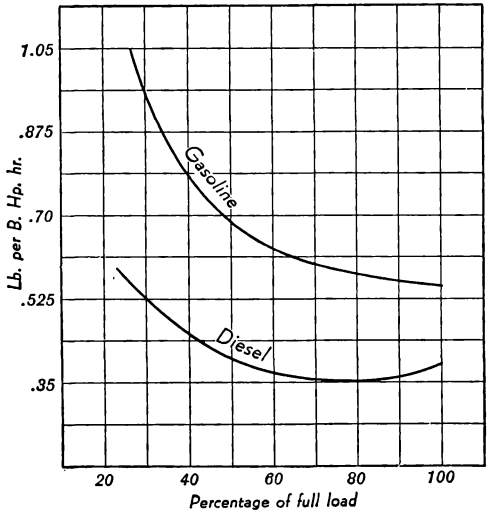

FIG. 11.—Fuel Consumption of A.E.C. Engines.

High speed Diesel engines operating at much higher compression ratios give higher thermal efficiency values, hence for a given horsepower output they consume less fuel. The average fuel consumption of an A.E.C. gasoline engine may be given as 0.6 lb. per brake horsepower hour, whereas in the case of high speed A.E.C Diesel engines, fuel consumption averaged 0.4 lb. per b.hp. hour.

A further comparison of fuel consumption in gasoline and Diesel

engines is shown in Fig. 12. Here it will be seen that the gasoline engines have their best economy at their maximum output, while in most cases, the Diesel engines have approximately flat fuel consumption curves from half load to full load.

Utilization of not more than 80% of the air charge should

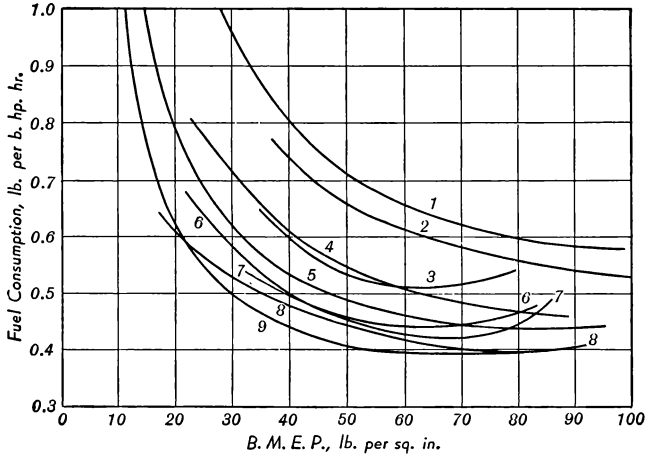

FIG. 12.—Fuel Consumption at Various B.M.E.P.

1—A.E.C. gasoline engine	(Manufacturer's data)
2—Gasoline engine	(Heller's data)
3—Graz-Hesselman Diesel	(Heller's data)
4—Benz Diesel	(Manufacturer's data)
5—Junkers Diesel	(Judge's data)
6—A.E.C. Diesel	(Manufacturer's data)
7—M.A.N. Diesel	(Heller's data)
8—Brotherhood Diesel	(Manufacturer's data)
9—Lister Diesel	(Manufacturer's data)

result in a clear exhaust with well designed Diesel engines. However, the exhaust is affected by the chamber design (open-, ante-, turbo-, or air-chamber), the fineness of fuel atomization, and by the brake-mean-effective-pressure.

Dicksee* has tested a number of Diesel engines of various makes and chamber constructions and his findings are shown in Fig. 13.

Cycle of Operation. Diesel engines operate either on a cycle similar to that proposed by Beau de Rochas or on the one originated

* C. B. Dicksee, Some Problems Connected with High Speed Compression-Ignition Engines, Proc. I.A.E., March, 1932.

by Clerk. The 4-cycle principle is essential for high-speed engines, whereas the 2-cycle serves well for medium or slow-speed engines.

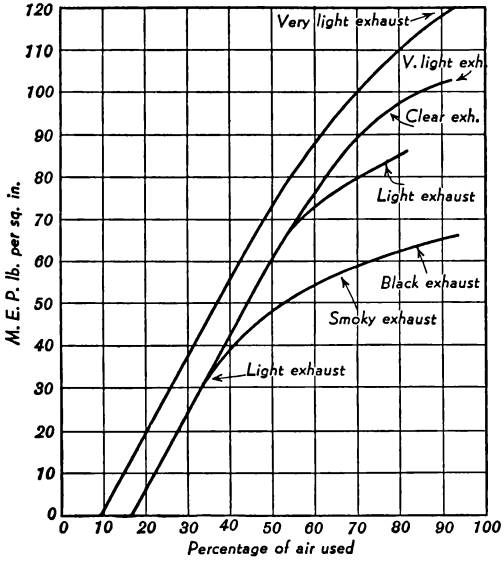

FIG. 13.—Exhaust at Various B.M.E.P. Values.

The operation of the four-stroke cycle, more generally called the four cycle, is shown in Fig. 14. The cycle consists of four strokes,—intake, compression, power, and exhaust. On the intake stroke, the intake valve is open and air is pulled into the cylinder by the piston as it moves through its first stroke. Soon after bottom dead center, the intake valve closes and the piston moves upward on the second stroke of the cycle compressing the air. Shortly before top dead center, the fuel oil is injected into the combustion space. Before the piston starts down on the power stroke, the fuel and air are ignited due to

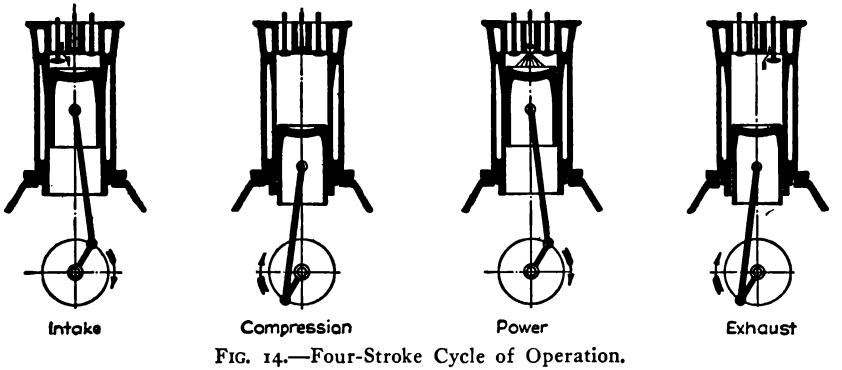

FIG. 14.—Four-Stroke Cycle of Operation.

the high air temperature (700° F. or over). The power generated by combustion forces the piston down, and the exhaust valve is opened as the piston approaches the end of its stroke. The re-

maining combustion pressure is thus relieved, and the piston travels up on the exhaust and final stroke of the cycle, forcing out the burned gases. The exhaust valve is closed, the intake valve is opened, and the cycle is repeated.

The two-stroke cycle (two-cycle) operation is shown in Fig. 15. In this cycle the piston has a power stroke for every revolution of the crankshaft. The four operations necessary for each cycle are obtained in two strokes with the aid of the crankcase. Air is pulled into the crankcase through valve "A" by the suction created when the piston moves up. This air is compressed slightly on the down

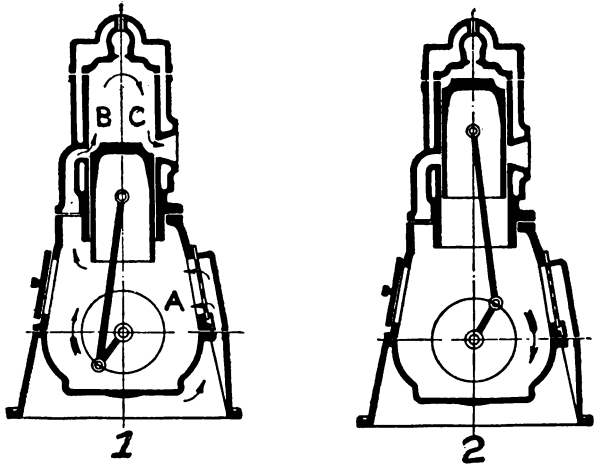

FIG. 15.—Two-Stroke Cycle of Operation.

stroke of the piston. When the piston uncovers the intake ports "B," the air rushes into the cylinder. The air is compressed in the cylinder on the upward stroke of the piston; fuel is injected, combustion takes place, and the piston moves down on the power stroke. When the piston uncovers the exhaust ports "C," the exhaust gases rush out, the intake ports "B" are opened, and air is again blown in from the crankcase, forcing out the burned gases and filling the cylinder with a new charge of air.

In most two-cycle Diesel engines, a separate compressor is driven by the engine, and furnishes the scavenging air.

Indicator Diagrams. The length of the indicator diagram represents the piston travel, while the height shows the cylinder

pressure. The indicator diagram shows graphically what happens in the cylinder while the engine is running, and thus gives reliable information in regard to the engine's efficiency.

In addition to this, indicator diagrams are useful as guides in timing the valves and in equalizing the compression, and are universally used on the slower speed engines for determining the indi-

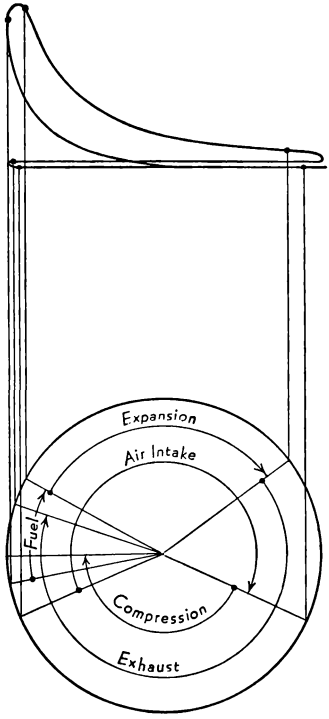

FIG. 16.—Indicator Diagram, Four-Cycle Engine.

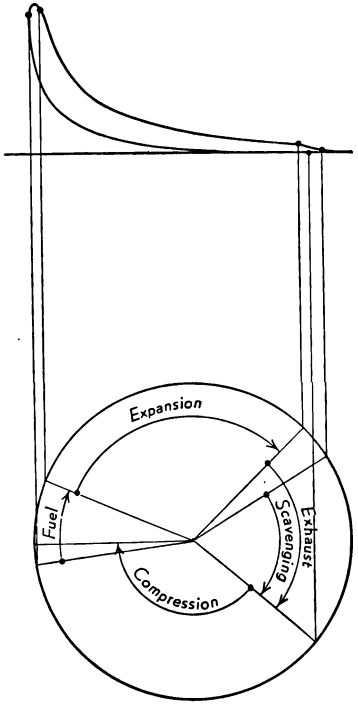

FIG. 17.—Indicator Diagram, Two-Cycle Engine.

cated horsepower. Correct compression is absolutely essential for the efficient operation of a Diesel engine; an indicator diagram would readily show the actual compression pressure. All cylinders should have nearly the same compression, and never should the compression be allowed to drop more than 20 lb. per sq. in. below the pressure recommended by the engine builder.

The timing of the fuel injection is of the utmost importance and can be checked by the indicator diagram; this is sometimes necessary

since the timing may vary due to wear in the fuel pump, to slackness in the driving gear, or wear of the cam and rollers of cam-operated fuel valves. Incorrect timing of the fuel injection might cause an explosion-like combustion, resulting in a dangerous increase in the maximum cylinder pressure. Combustion pressure should be kept within 50 lb. per sq. in. of the recommended full-load pressure.

Figs. 16 and 17 show the relationship between the valve action and the indicator diagram of a 4-cycle and a 2-cycle engine, respectively. The cycles may be traced on these indicator diagrams in conjunction with their valve diagrams shown beneath them.

PROBLEMS

1. What will be the air standard efficiency of the Modified cycle if the compression ratio is 12, the ratio of pressure rise 2, and the cut-off ratio 1.5?

2. What will be the air standard efficiency of the Diesel cycle if the compression ratio is 15, and the cut-off ratio 2?

3. What will be the air standard efficiency of the Otto cycle if the compression ratio is 6.5?

4. What would be the air standard efficiencies of the Modified, Diesel, and Otto cycles if the compression ratios were all 14; the ratio of pressure rise and the cut-off ratios to be as stated in problems 1 and 2?

5. From Table I, determine the final compression temperature if the initial air temperature is 95° F., the compression ratio is 14, and n is 1.32.

6. From Table I, what compression ratio will be required to give a final compression temperature of 930° F. if the initial air temperature is 85° F. and n is 1.34°?

7. What will be the compression pressure from Table II if the initial air pressure is 12.5 lb. per sq. in. abs. in an engine with a compression ratio of 14? Assume $n = 1.28$.

8. Under the conditions of problem 7, what compression ratio will be required to produce a compression pressure of 450 lb. per sq. in.?

9. What would be the final compression temperature if the initial air pressure is 13.0 lb. per sq. in. abs., the final compression pressure 475 lb. per sq. in., and $n = 1.3$?

10. A final compression temperature of 950° F. is required in an engine which has air at 85° F. and 13.0 lb. per sq. in. abs. at the end of the suction stroke. What will be the required final compression pressure if $n = 1.31$?

Chapter 3

COMBUSTION

Combustion is the chemical combination of molecules of certain substances with molecules of oxygen to form new molecules and liberate heat energy. All fuels used in Diesel engines are made up of carbon and hydrogen, both of which burn in the presence of oxygen.

Combustion of Carbon. Carbon unites with oxygen and forms carbon dioxide, the reaction for which may be written

$$C + O_2 = CO_2 + \text{heat} \qquad (1)$$

This combustion produces 14,600 B.t.u. per lb. of carbon. If there is not a sufficient amount of oxygen to burn all of the carbon present, the latter must unite with one of the oxygen atoms of the carbon dioxide, which then causes part of the carbon and oxygen to form carbon monoxide. Such a reaction is incomplete, and the heat value per pound of carbon burned to carbon monoxide is only 4380 B.t.u.

In general, not more than 80 per cent of the available oxygen is made use of in Diesel engine practice. Diesel engines are normally operated with a surplus of oxygen in contradistinction to a gasoline engine, which generally operates with a rich mixture, i.e. actual shortage of oxygen.

Diesel engines suffering from incomplete combustion are not lacking an adequate supply of oxygen but are subjected to inadequate fuel atomization. The oil droplets injected into the combustion chamber are comparatively large, hence the oxygen can only come in direct contact with the surface of the fuel droplet. Perfect atomization is considered to mean droplets of approximately 0.00016 in. diameter, which is not always possible.

The carbon atoms contained within the droplet can receive their oxygen only from the carbon dioxide forming on the surface of the

droplet. When the CO_2 breaks into CO and O_2, oxygen is supplied to the inner carbon atom. Thus the degree of atomization affects directly the engine's efficiency.

Analyzing the chemical reactions of combustion, it is fair to assume that they follow in this order:

$$C + O_2 = CO_2 \quad (1)$$

$$C + CO_2 = 2CO \quad (2)$$

$$2CO + O_2 = 2CO_2 \quad (3)$$

Combustion of Hydrogen. The hydrogen atoms of the fuel-oil molecule unite with the oxygen to form water vapor, the reaction being

$$2H_2 + O_2 = 2H_2O \quad (4)$$

This reaction generates 62,100 B.t.u. per lb. of hydrogen.

Proportions by Weight.—The reaction equations indicate the relation of the atoms, not the weight of the carbon, oxygen, and hydrogen present. Their atomic weights are hydrogen-1, carbon-12, and oxygen-16. Equation (1) may be written

$$12 \text{ lb. } C + 32 \text{ lb. } O_2 = 44 \text{ lb. } CO_2$$

indicating that 44 parts of carbon dioxide are formed when 12 parts (by weight) of carbon combine with 32 parts of oxygen. Or, stated in another form, 1 lb. of carbon requires 2.666 lb. of oxygen and produces 3.666 lb. of carbon dioxide. One lb. of air contains 0.23 lb. of oxygen; thus 11.6 lb. of air are necessary for the combustion of 1 lb. of carbon. Since air at 70° F. and 14.7 lb. per sq. in. abs. has a volume of 13.33 cu. ft. per lb., the 11.6 lb. of air needed for the combustion of 1 lb. of carbon has a volume of 154.63 cu. ft. Similarly, 1 lb. of hydrogen requires 8 lb. of oxygen or 34.78 lb. of air.

If it is assumed that an average fuel oil contains about 86 per cent carbon and 14 per cent hydrogen (by weight), then the weight of air required for the combustion of 1 lb. of fuel oil will be

$$(0.86 \times 11.6) + (0.14 \times 34.78) = 14.85 \text{ lb.}$$

These are theoretical considerations; in actual practice it is customary to provide from 20 to 30 lb. of air per lb. of fuel, so that there will be at least 30 per cent excess air even when the engine is operating at full power.

Effects of Excess Air. While in actual operation, Diesel engines are being provided with more air than the above calculations call for, yet Prof. Ellenwood of Cornell University has worked out charts providing for a marked increase of the customary air-fuel ratio, Fig. 18.

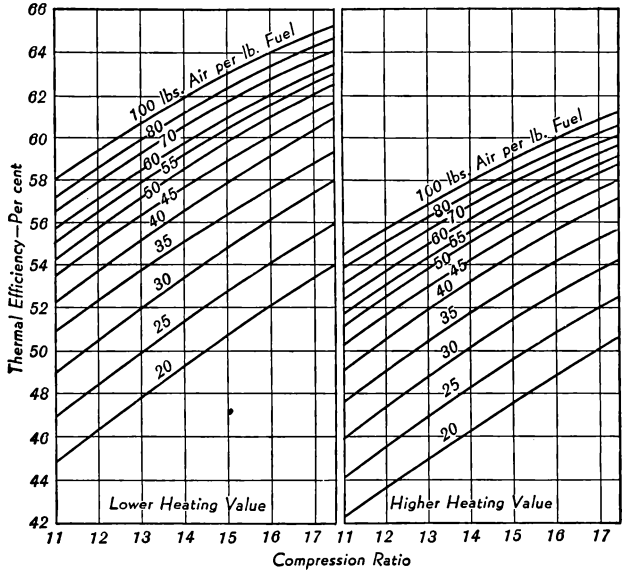

FIG. 18.—Air-fuel Ratio Efficiency.

The possible increase in efficiency with a given increase of the air-fuel ratio applies to thermal efficiency only. In the Diesel engine, the brake horsepower output will decrease with any abnormal increase of the air-fuel ratio, due to mechanical losses. In general it may be said that a supply of 20 lb. of air per lb. of fuel gives the best all-around results in actual operation at full speed and full load. At reduced or idling speeds, the air-fuel ratio increases automatically.

It will also be noticed that an increase of 50 per cent of the compression ratio will result in but 10 to 20 per cent additional thermal efficiency, which constitutes a sound argument against the excessively high compression ratios with which some of the Diesel engines seem to be burdened.

To what extent the indicated mean effective pressure is affected by the percentage of air used is graphically shown in Fig. 19.

The chart shows the i.m.e.p. that may be reached with an average Diesel fuel oil (19,300 B.t.u. per lb., higher heating value) assuming a volumetric efficiency of 85 per cent for various thermal efficiencies of 30 to 50 per cent.

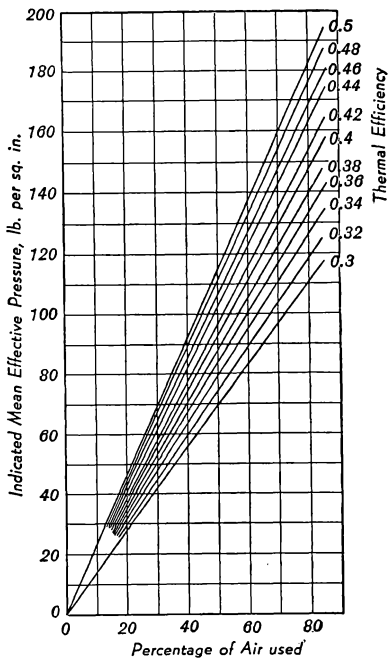

FIG. 19.—Theoretical Values for I.M.E.P.

Combustion Process. The combustion process of a Diesel engine consists of 3 distinct periods, as against but 2 periods in the case of the gasoline engine. To make this clear, the combustion process of the gasoline engine will be reviewed first.

Gasoline Engine Combustion. The 2 period combustion of a gasoline engine takes place as follows:

(1) The electric spark of the plug inflames that portion of the gas-air mixtures which is in the proximity of the spark plug.
(2) The flame propagates, causing the remainder of the gas-air mixture to become inflamed.

The first period, the creating of a gas flame, is subject to time, known as the "delay angle," which angle increases with the speed of the engine. The second period, while also subject to delay, progresses uniformly and practically irrespective of speed. Fig. 20 illustrates this.

The upper graph in Fig. 20 refers to an engine operating at 1,000 r.p.m., ignition taking place 15 deg. before T.D.C. It will be noted that the 1st period occupies 10 deg. (crank degrees) and the 2nd period—maximum rise in combustion pressure—also approximately 10 deg.

The lower graph shows the engine operating at 2,000 r.p.m., ignition occurring 22 deg. ahead of T.D.C. The first period now requires 20 deg. whereas the second period is again completed

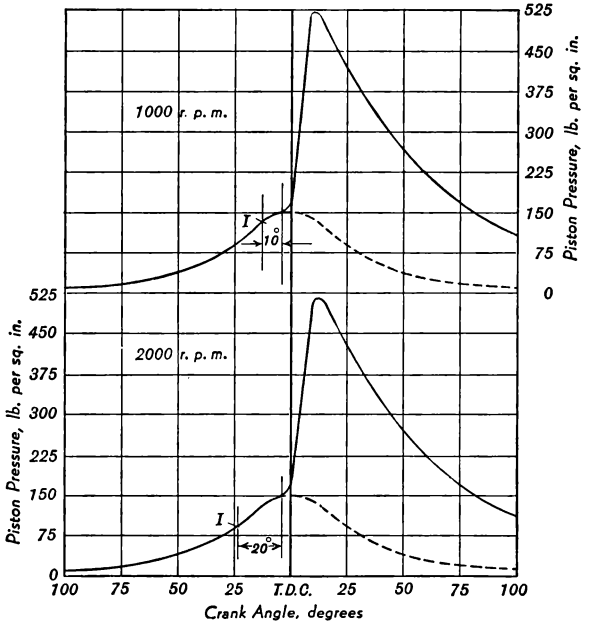

FIG. 20.—Combustion Pressure Rise Gasoline Engine.

within 10 deg. crank movement. Of course, the first as well as the second period is subject to certain factors which affect or alter the above. In the case of the first period, such factors are:

(1) the chemical constituents of the fuel,
(2) the fuel-air proportions; hence the temperature of the flame,
(3) the temperature of the fuel-air mixture, and the temperature of the engine cylinder,
(4) the compression pressure at the time of ignition.

The second period, the flame propagation, depends upon

(1) the construction and shape of
  (a) the combustion chamber, and
  (b) the inlet passages.
  While (a) influences the rate of burning, it also aids (b) in the formation of turbulence, and
(2) the degree of turbulence.

In general, the length of the first period (in crank degrees) increases with the speed of the engine; the length of the second period,

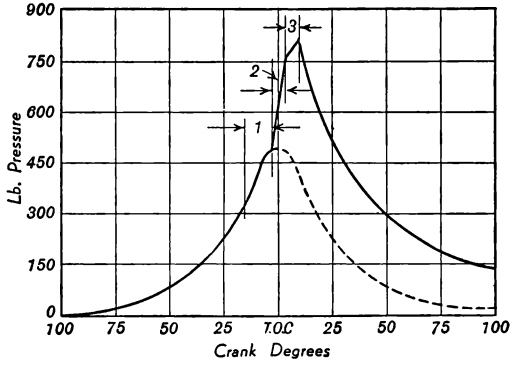

FIG. 21.—The Three Combustion Periods of a Diesel Engine.

being dependent upon turbulence, remains relatively constant, since higher speed brings about higher turbulence and thus no appreciable increase in period duration measured in crank-angle degrees.

Diesel Engine Combustion. In the Diesel engine, we recognize three periods:

(1) delay period, the air charge is compressing, heat is generated thereby; fuel is being injected; combustion is momentarily delayed.
(2) the heat of the compressed air ignites the minute oil-droplets; a flame forms.
(3) the flame spreads; the entire fuel-air charge burns.

The three periods of Diesel engine combustion are shown in Fig. 21. Fuel oil is injected approximately 20 deg. before T.D.C. Part 1 of the graph indicates the delay period, part 2 the forming

of a flame (beginning of combustion), and part 3 the actual combustion accompanied by a combustion pressure rise.

Whereas the delay period in gasoline engines varies with the speed of the engine, the delay period of Diesel engines varies with the temperature of the air charge. An example of this relative variation is shown in Fig. 22.

The matter of combustion represents two diametrically opposed problems; whereas in the case of the gasoline engine precautions

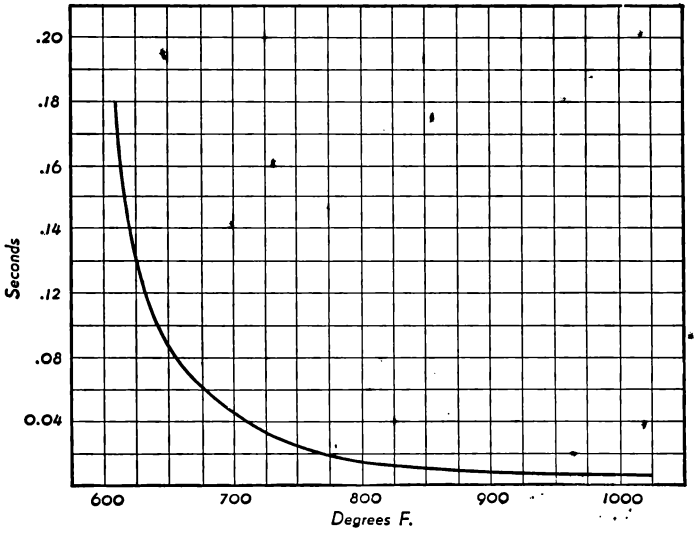

FIG. 22.—Delay Period of a Diesel Engine.

must be taken to prevent detonation,—by means of doped fuel, specially shaped combustion chambers, etc., the Diesel engine requires, for high speed operation, the speeding up of the combustion, especially during the second period.

Effect of Injection Timing. For high speed Diesel engines, the fuel injection must begin some 20 deg. before the piston reaches top-dead-center. The effect of early injection upon the delay angle, the b.m.e.p., and the maximum pressure reached within the combustion chamber of a Diesel engine, operating with low turbulence, is shown in Fig. 23. The fuel, injected into relatively still air, does

not ignite readily and hence such engines operate with a delay period which increases with an increase in injection advance.

In Fig. 24 is illustrated the opposite effect. Here, an engine of a different combustion chamber construction and imparting a maximum of turbulence to the air charge, the delay period decreases as the injection is advanced.

This illustrates the importance of providing sufficient turbulence to the air charge. Turbulence is not so important in low speed engines, but high-speed automotive engines demand the very minimum of delay period which then calls for the maximum of turbulence.

Precautions must be taken, however, so that the turbulence does not lower the air temperature T_2, which may occur when the heat of the compression is being dissipated to the cylinder walls and pistons. This would cause an increased ignition lag or delay period.

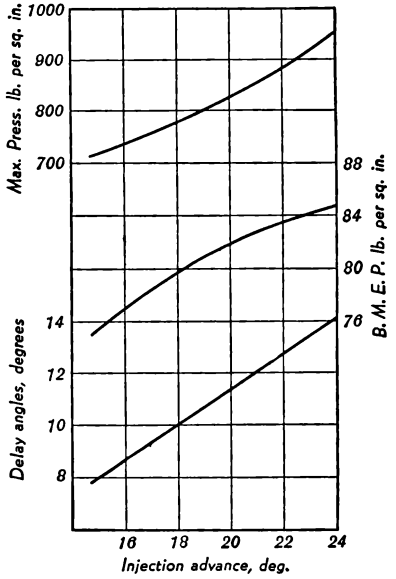

FIG. 23.—Effect of Injection Advance, Low Turbulence.

Load Effect on Delay Period. Dicksee * has shown that the delay period decreases with an increase in load, Fig. 25. A number of indicator diagrams were taken at constant engine speeds but with the b.m.e.p. varying from 7 to 95 lb. per sq. in. The fuel injection was given the minimum of advance that would produce maximum power output. As will be seen, the delay angle decreases steadily until reaching its minimum value of 5½ deg.

Effects of Injection Advance. The effects of varying the beginning of injection as determined by John A. Spanogle † with the

* C. B. Dicksee, Proc. I.A.E., March, 1932.
† A.S.M.E. Transactions, Vol. 53, 1931.

N.A.C.A. universal test engine are shown in Fig. 26. Only the beginning of injection was varied during these tests. The engine was supercharged to a gage pressure of 4.2 lb. per sq. in., and the inlet temperature was maintained at 125 deg. F.

The injection advance of 39 deg. gave abnormally high pressure rises with a b.m.e.p. of 115 lb. per sq. in. while the maximum b.m.e.p. of 127 lb per sq. in. was obtained at both 28 and 30 deg.

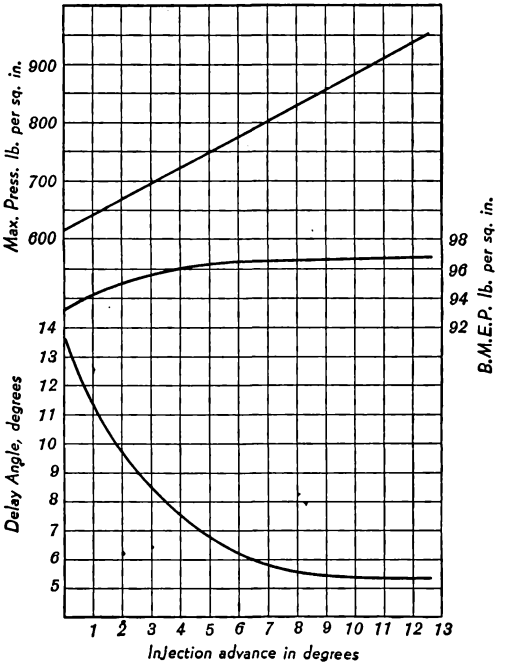

FIG. 24.—Effect of Injection Advance High Turbulence.

advance. The b.m.e.p. gradually decreased as the injection was further retarded. If the tests at 39 and 9 deg. advance are neglected, the pressures on the expansion curves are practically the same at 50 deg. past top-dead-center, and are, therefore, practically independent of the advance of the injection.

Effects of Air Temperature and Density on Ignition Delay. A steel bomb was used by Holfelder * in a study of the effects of

* Dr. O. Holfelder in, Forschungsheft 374, V.D.I.-Verlag, Berlin, 1933.

air temperature and density on ignition delay. Conditions were employed approximating the engine cylinder, except that the combustion occurred in still air. A Bosch fuel pump was used in conjunction with a pintle type nozzle (Fig. 92). Quartz windows in the bomb permitted photographs to be taken of the combustion process at speeds as noted under the photographs shown in Fig. 27. The bomb was charged, before injection of the fuel, with air at the temperatures and pressures as noted.

Ignition delay was shown to be proportional to (a) the temperature and (b) the density of the compressed air. Typical

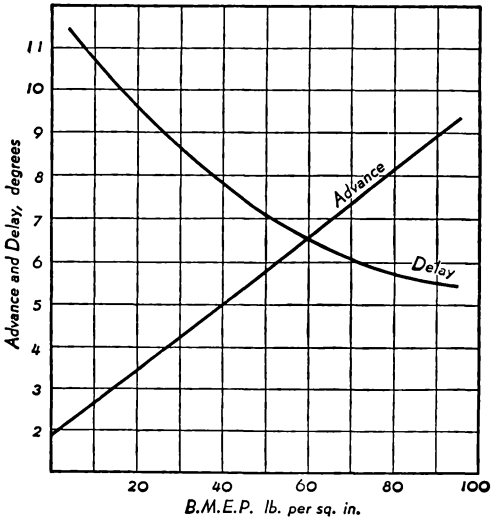

FIG. 25.—Effect of Load on the Delay Period.

samples of the tests (over 200 in all) are shown in Fig. 27. The effect of air temperature can be seen by comparing photographs (A) and (C). The air density was practically the same in each case, while the temperatures were 970 and 1040 deg. F. This caused the delay to be reduced to less than half, even though more fuel was injected in (C) than in (A). The variation in delay due to air density is shown in (A) and (B). Here there was little difference in air temperature, but the density was increased over 20 per cent. As a result the ignition delay was again reduced to less than half.

The results obtained by Prof. Bird at Cambridge confirm the findings of Holfelder and also show that while the pressure effect on ignition lag was small, the density factor was an important variable. These results are shown in Fig. 28 where the ignition lag is

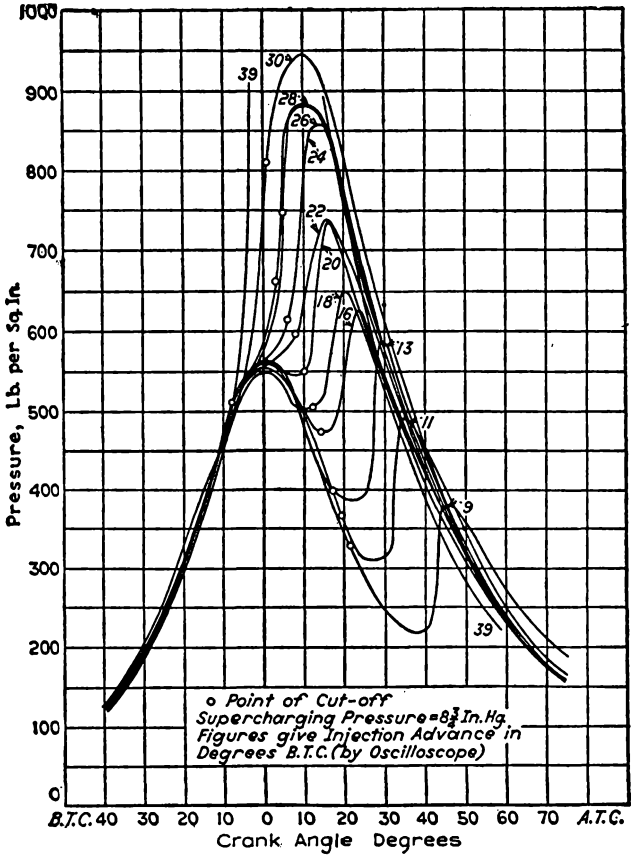

FIG. 26.—Effect of Injection Timing on Cylinder Pressure.

plotted on the vertical ordinate, the air temperature on the L.H. horizontal lines and the air density (P/T) along the R.H. horizontal lines.

It must, however, be remembered that the air into which the fuel was injected was stationary, and therefore the actual values of

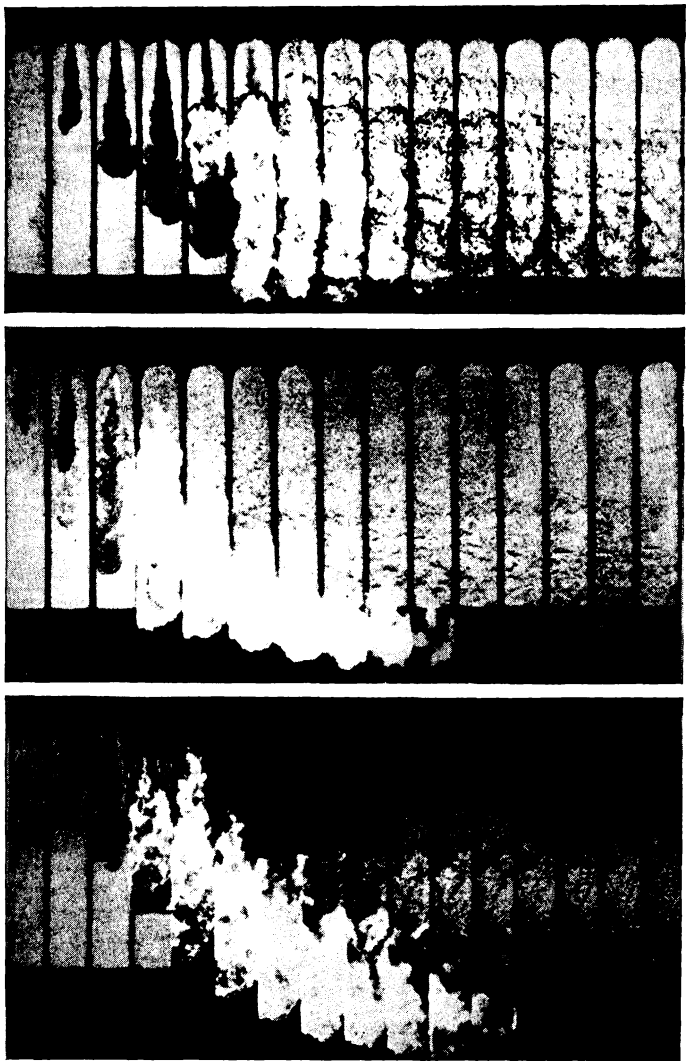

FIG. 27.—Flame Propagation with Variable Air Temperature and Density.

	Ign. Delay Sec.	Comp. Temp. Of.	Comp. Press. lb. per sq. in.	Weight Air lb. per cu. ft.	Weight Fuel lb.	Inj. Press. lb. per sq. in.	Photo Speed per sec.
A	0.0075	970	353	0.637	0.0116	4410.	390
B	0.0031	980	426	0.78	0.0116	4410.	415
C	0.0029	1040	426	0.64	0.0147	4410.	415

the ignition lag are much higher than would be experienced in an actual engine.

The effects of many factors on Diesel engine combustion have

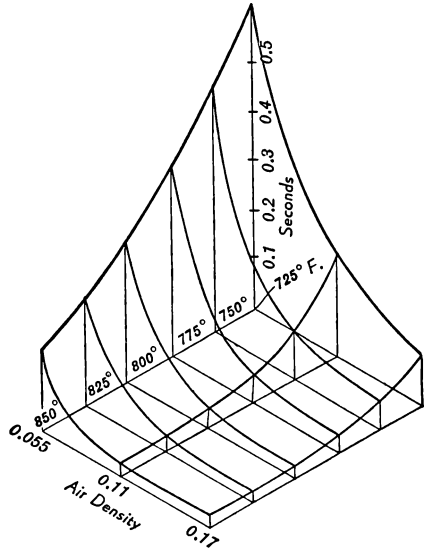

FIG. 28.—Effect of Charge Density and Temperature on Ignition Lag.

been discussed in this chapter. Combustion is also affected seriously by combustion chamber type and design, and by the control of air turbulence. These will be discussed in the chapter on combustion chambers.

PROBLEMS

1. How many pounds of air will be required per pound of Beaumont oil (p. 44) so as to provide 20 per cent excess air for combustion?

2. How many pounds of air will be required per pound of Mexican oil (p. 45) so as to provide 20 per cent excess air for combustion?

CHAPTER 4

FUEL OILS

The Diesel engine being an oil-burning prime mover, the oils suitable or unsuitable for use in such engines deserve to be treated in a manner above the perfunctory.

Oils are commonly classified according to their density, and "heavy," or "viscous," oils are those of a comparatively low heat value, with a high percentage of asphalt. Very "fluid" oils, however, are light oils high in heat value, rich in the lighter hydrocarbons, and exceedingly volatile. But there are so many variations and exceptions that, in order to identify a particular oil, it is essential to specify clearly its various properties. And further, we must distinguish between natural, coal-tar and vegetable oils.

Petroleum Oils. Crude petroleum is the only natural oil. It is generally dark brown in color and of a greenish tinge. Its specific gravity averages about 0.8, and it is composed of a number of liquid hydrocarbons of different chemical compositions, varying widely in specific gravity. The ultimate analysis of an average sample would indicate a composition approximating the following:

Carbon	84%
Hydrogen	14
Oxygen	2
	100%

Since the inherent oxygen combines with its equivalent of hydrogen and forms H_2O, for all practical purposes the composition becomes:

Carbon	84.00%
Hydrogen	13.75%
Water	2.25
	100.00%

A pound of petroleum oil of the above composition, therefore, possesses a heating value of:

Carbon	0.84	× 14,600 =	12,250 B.t.u.
Hydrogen	0.1375	× 62,100 =	8,540 B.t.u.
Total			20,790 B.t.u.

Heating Values of Fuel Oil. The combustion of hydrogen results in the formation of water vapor which passes off in the exhaust in a superheated form.

When the heating value of a fuel is determined in a calorimeter, the products of combustion are cooled to approximately room temperature, thus adding on the latent heat of evaporation and the heat of the liquid of the water vapor formed, to determine the heating value of the fuel. This is called the *higher heating value* (H_h).

When the fuel oil is burned in a Diesel engine, the temperature of the exhaust gases is considerably above 212° F. when they are discharged from the engine. Hence the water vapor is still superheated. In fact, it would not condense before the temperature of the gases was reduced to about 100° F. due to the partial pressure of the vapor in the exhaust gases. It has been thought by many that a *lower heating value* based on some arbitrary exhaust temperature should be used as a basis for determining the thermal efficiency of an engine. However, the *higher heating value* is generally accepted in the United States for use in all thermal efficiency tests of engines.

A general formula for the heating value of fuel oil is (A.S.M.E. formula),

$$H_h = 17{,}680 + 60 \times \text{degrees A.P.I.}$$

The Baumé hydrometer scale using the modulus 141.5 is used in the petroleum industry on the recommendation of the American Petroleum Institute and expresses specific gravity in degrees A.P.I.

Physical Properties. The important physical properties of Diesel fuel oil are the flash point, fire point, viscosity, carbon residue, and sulphur content. The temperature at which the inflammable vapor given off from the fuel oil will ignite temporarily (i.e.,

flash) is the flash point. The temperature at which the vapor will ignite and continue to burn is the fire point. Viscosity, the term commonly used when dealing with liquid fuel, is the time required for a definite volume of oil to flow through an orifice of specific size and shape, at a given temperature. Viscosimeters in common use are the Saybolt Universal and Saybolt Furol. They are specified in the American Society for Testing Materials Standards for Fuel Oils. The Universal is used at 100° F. and the Furol at 122° F.

The percentage of the fuel oil remaining as carbon residue, on evaporating an oil under specific conditions, gives a relative measure of the carbon-forming propensity of an oil. The Conradson Carbon Residue test is the accepted method. Ten grams of oil are placed in a porcelain crucible, which in turn is placed in a closed Skidmore iron crucible. This assembly is then placed in a sheet iron crucible with cover under a hood and heat applied from a Meker type gas burner.

The sulphur content of fuel oil is a measure of its acid-forming characteristics. It is determined by burning a given quantity of fuel oil in an oxygen bomb in the presence of distilled water, and the subsequent treatment of the liquid with hydrochloric acid, bromine water, and barium chloride solution.

The U. S. Bureau of Mines issues the following specifications for Diesel engine fuel. The oil is defined as a hydro-carbon liquid, free from grit, acid, and fibrous or other foreign matter likely to clog or injure the valves. The flash-point shall not be lower than 150° F. (Pensky-Martens closed tester). The water and sediment must not exceed 0.1% nor shall it have a carbon residue exceeding 0.5% or a sulphur content exceeding 1.5%. No viscosity is specified.

In general it may be said that the fluidity (viscosity) of the fuel oil used must be sufficiently high to permit the fuel pumps and fuel injectors to handle the oil without abnormal preheating. The oil must be free from sediment and other impurities which might clog the pumps or injectors or cause excessive cylinder wear. Water must not be present in any appreciable quantity, since it would interfere with ignition and also lower the calorific value of the oil. The sulphur content must be held as low as possible to prevent the forma-

tion of corrosive acids within the engine. The presence of residual matter or coke cannot be entirely avoided, but 5% is unquestionably the upper limit to be tolerated.

Coal-Tar Oils. Products from bituminous coals, such as coal-tar and benzol liquids, are also used as fuel in Diesel engines. They usually possess a high ignition temperature and therefore are often blended with petroleum products so that they may ignite more readily. These liquids, being of higher cost in comparison with petroleum oils, are used only in countries not having petroleum deposits and where bituminous coals are cheap.

Vegetable Oils. This group consists of oils produced from the castor bean, the soy bean, beets, cocoanuts, peanuts, cottonseed, and other vegetable matter of almost unlimited variety. All of these oils, although usually of a higher ignition temperature than petroleum oils, can be used for Diesel engines, but here again their use is restricted to localities where no natural crude oil exists, where vegetation is superabundant, and where labor is cheap.

TYPICAL AMERICAN OILS

COLINGA, CAL.

C, 86.37%; H, 11.30%; N, 1.13%; S, 0.60%; H_2O, 0.6%. Specific gravity, 0.95%. Flash point, 162° F. Calorific value, 18,720 B.t.u. per lb.

PENNSYLVANIA CRUDE.

C, 84.9%; H, 13.7%; O and N, 1.4%. Specific gravity, 0.89. Calorific value, 19,210 B.t.u. per lb.

PENNSYLVANIA LIGHT OIL.

C, 82.0%; H, 14.8%; O and N, 3.2%. Specific gravity, 0.83. Calorific value, 17,930 B.t.u. per lb.

BEAUMONT, TEXAS.

C, 84.60%; H, 10.90%; O, 2.87%; S, 1.63%. Specific gravity, 0.92. Flash point, 142° F. Fire point, 181° F. Calorific value, 19,060 B.t.u. per lb.

WEST VIRGINIA.

C, 84.3%; H, 14.1%; O and N, 1.6%. Specific gravity, 0.84. Calorific value, 18,400 B.t.u. per lb.

MEXICAN CRUDE.

C, 82.8%; H, 12.19%; O, 0.43%; S, 2.83%; N, 1.72%. Specific gravity, 0.91. Flash point, 77° F. Fire point, 120° F. Calorific value, 18,493 B.t.u. per lb.

A special Research Committee appointed by the American Society of Mechanical Engineers has tentatively prepared specifications for a Diesel oil suitable for light high-speed and for heavy-duty slow-speed engines.

The specifications are:

Type of Engine	Light High Speed	Heavy-Duty Slow Speed
Viscosity at 100° F. Saybolt sec.	max. 100 min. 45	max. 220
Sulphur, maximum per cent	2	3
Conradson carbon, maximum per cent	1	4
Ash, maximum per cent	0.02	0.08
Flash, minimum degrees F.	150	150
Moisture and sediment, maximum per cent	5	5

Standardizing Diesel fuel oil into one grade is obviously impossible; on the other hand, Diesel engine builders must desist from sponsoring fuel oils widely varying in specifications. Confusion and high fuel prices inevitably result from individualized oil specifications.

The quality of the Diesel oil depends upon the characteristics of the crude oil. Pennsylvania and Ohio crudes have a paraffin base and contain considerable quantities of the lighter liquid constituents. California and Texas Gulf Coast crudes contain comparatively little of the lighter constituents and are of a base having close chemical

relations with asphaltum. The Oklahoma, Kansas, and Wyoming crudes are known as the mixed-base petroleum, having properties of both the paraffin and asphalt crudes.

Crude oils from either Pennsylvania or Ohio may readily (after filtering) be used as fuel in oil engines, whereas California and Texas oils may only be used in engines especially designed for such fuels. In general, crude oil, being a mixture of various substances having very divergent physical properties, is not an altogether satisfactory fuel, and the gasoline content is a fire hazard not to be ignored.

The refining process is a distillation conducted in closed retorts. The vapors distilling below 150° F. are unsuitable as an engine fuel, because of their extreme volatility. The next portion, distilled off at from 100° to 400° F., is gasoline. Temperatures above 400° up to 500° F. condense kerosene. Fuel oils are then obtained through a varying range of temperatures. At higher temperatures, denser vapors can be condensed into lubricating oils, cylinder oils, paraffin wax, etc., and what is finally left over is called residuum. But since the greatest demand is for gasoline, refineries are using what is known as the "cracking process," which permits at least 60 per cent of the original crude oil to be turned into gasoline.

The usual so-called Diesel fuel oil is of 20° to 40° A.P.I. and is obtained after the gasoline and kerosene constituents have been distilled from the original crude. The sulphuric acid, which is generally introduced during the distillation process, is then removed, and the remaining fuel oil is of varied color ranging from yellow to black, depending upon the origin of the crude. The color, however, is no criterion as to the quality nor the specific gravity of the oil, because the crudes differ widely not only in color but also in their constituents.

Ignition Temperature. The auto-ignition point for various fuels has been investigated by Tausz and Schulte * and may be tabulated as follows:

* Tausz and Schulte, Uber Zundpunkte und Verbrennungsvorgange im Dieselmotor, 1924.

	Ignition at Atmospheric Pressure		Under Compression Pressure	
	In Air ° F.	In Oxygen ° F.	° F.	lb. per sq. in.
Crude oil	637	518	401	400
Petroleum	554–815	482–509	392	380
Shale Oil	669–815	522–554	392	340
Paraffin	730–777	469–496	442	170

It is interesting to note that crude oil requires but 401° F. temperature and a pressure of 400 lb. per sq. in., whereas paraffin demands a temperature of 442° F. and a pressure of but 170 lb. per sq. in.

The auto-ignition point of fuel decreases with an increase in compression pressure, or rather with an increase in air density. Tausz and Schulte have established the self-ignition points of various fuels at different compression pressures shown graphically on Fig. 29.

Tausz states that the above are average values, and that in so far as aromatic hydro-carbons are concerned, the values may shift according to the purity of the fuel. To wit: chemically pure benzol (in O_2) possesses a self-ignition point of 1225° F., whereas commercial benzol has an ignition point of only 1070° to 1094° F.

Paraffinic oils are preferred for Diesel engine operation because they ignite more readily than aromatic oils. This explains why a given Diesel engine cannot be successfully operated with a variety of fuels. The fuel to be used determines the compression ratio to be used, which in turn controls the temperature generated within the engine's cylinders. In the not too distant future, it will be necessary for Diesel engine manufacturers to adapt their engines so as to use the fuel available in any given locality rather than demand a given fuel for use with their engines.

Confining ourselves to petroleum oil—which is the standard Diesel fuel for America—we find that a compression pressure of 300 lb. per sq. in. and a temperature of 406° F. would suffice to cause auto-ignition. These figures, however, consider merely the

auto-ignition point; they do not allow for a time lag. The ignition delay for high speed Diesel engines must not exceed 0.003 sec., otherwise high speed performance would be impossible.

The curves of Tausz and Schulte do not interpret correctly the results obtained, since it is the density of the compressed air rather than the pressure that lowers the auto-ignition point.

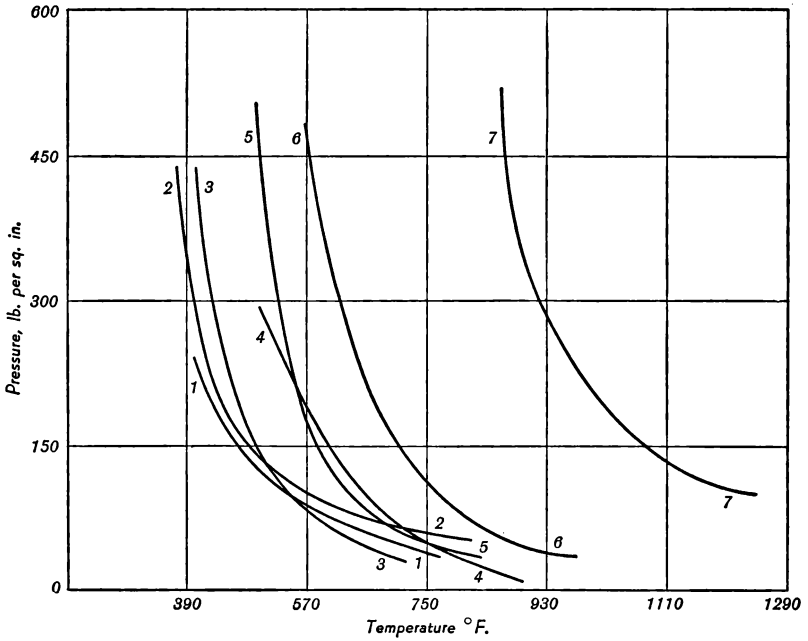

FIG. 29.—Pressure Influencing Auto Ignition.

1. Paraffin.
2. Petroleum fuel oil.
3. Gas oil.
4. Machine oil.
5. Gasoline.
6. Lubricating oil.
7. Benzol.

The average compression pressure of today's Diesel engines varies between 380 and 500 lb. per sq. in. Assuming an initial temperature of 80° F. for the cold engine, and 125° F. for a warm engine in operation, we find from Tausz' graphs that a compression pressure of 107 lb. per sq. in. would suffice to produce auto ignition in a cold engine and a pressure of but 90 lb. per sq. in. would be ample for a warm engine in operation.

Since the ignition delay is dependent upon surplus heat, higher

compression pressures must be used in order to obtain the heat surplus necessary for the reduction of the ignition delay.

In Fig. 30 are Tausz' and Schulte's ignition points (curve No. 1) plotted against compression pressure, the resultant compression temperatures against compression pressure when the initial tempera-

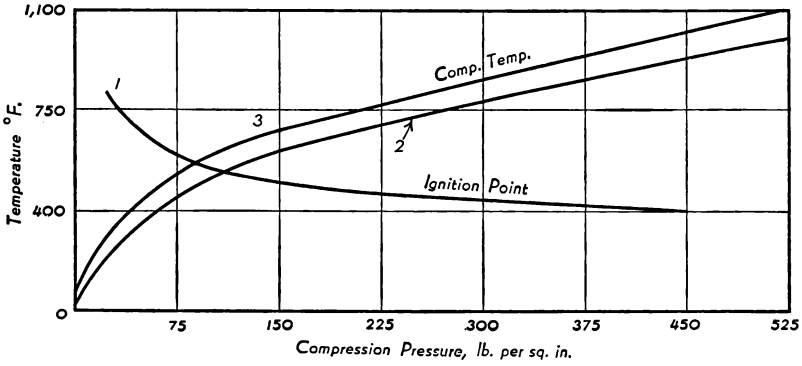

FIG. 30.—Ignition Points of Fuel Oil and Final Temperature.

ture was 80° F. (curve No. 2), and with an initial temperature of 125° F. (curve No. 3).

It will be observed that a compression pressure of 410 lb. per sq. in. in a cold engine will result in a final temperature of 932° F. and that for a warm engine T_2 will reach a temperature of 1022° F. We thus obtain a heat surplus, to be utilized for the reduction of the ignition delay, of 522° F. within a cold motor, and 612° F. within a warm motor in actual operation.

From the above it is manifest that the end temperature must be high enough to reduce the ignition delay to the very minimum. On the other hand, an excessive temperature is not desirable in that excessive compression pressures require unusually heavy engine construction and result in rough performance.

The reduction of the end-temperature by means of lower compression pressures, down to 300 lb. per sq. in. or thereabouts, defeats itself, making either high speed impossible or requiring outside means for ignition (spark plugs, etc.).

Ignition Quality of Oils. While the efficiency of a high-speed Diesel engine depends upon the combustion chamber design, position

and type of fuel injector used, injection pressure, degree of turbulence, compression pressure, temperature of the combustion chamber, and certain other factors, it is axiomatic that a poor fuel can be used with some success in a well designed engine, but that the best fuel available cannot cure what is an inherent design defect.

The ignition lag, also called the delay angle, can readily be ascertained from an indicator diagram, and the fuel showing the least lag is the best fuel, other things being equal. Of course, the actual results obtained with any given type of engine by no means assure similar results with a totally different kind of engine, but, on the other hand, there are engines which readily operate on fuel-oil, kerosene, lignite-tar oil and most of the vegetable oils of the tropics.

Cetane Rating. Gasoline, as produced and commercially used today, is rated by an octane number, the highest octane rating indicating the best gasoline. With fuel oils a similar method of rating is used, known as the cetane number. *Cetane* ($C_{16}H_{32}$) gives a small ignition lag, whereas *alpha-methyl-naphthalene* gives a very large ignition lag. The per cent of cetane in a mixture of the two that will produce the same ignition lag in a test engine as the fuel oil is called the cetane number of the fuel oil.

There is no direct connection between cetane and octane ratings of fuel, except that a fuel with a high cetane value will have a low octane value. The cetane number of a fuel depends mainly upon its origin and its constituents, being determined largely by the nature of the crude oil from which the fuel is extracted. Generally speaking, those fuels derived from paraffinous crudes have high cetane numbers, while those extracted from high-aromatic-content crudes have a low cetane value.

Although the cetane rating of fuel oil on the basis of ignition lag is the method most commonly used, several other methods have been proposed.

Critical Compression Ratio. Pope and Murdock of the Waukesha Motor Co. have proposed the use of the critical compression ratio as a relative measure of the ignition quality of Diesel fuel oil. This test consists in driving an engine at a fixed speed and with a

constant temperature. The compression ratio required to cause the fuel to ignite is taken as the critical compression ratio.

When the test conditions are carefully controlled, good agreement is obtained with the cetane rating.

Diesel Index. A method of rating Diesel fuels on a basis of some of their physical properties has been suggested by Becker and Fischer of the Standard Oil Development Co. A "Diesel Index" was proposed, which is calculated as follows:

$$\text{Diesel Index} = \frac{\text{Aniline Point (Deg. F.)} \times \text{A.P.I. Gravity}}{100}$$

The aniline point is determined by heating a mixture of equal volumes of aniline and the sample of fuel oil in a jacketed test tube to a clear solution and then noting the temperature at which turbidity appears on cooling. Some laboratories have found good agreement with other methods of rating. The higher the Diesel index, the better the fuel.

Viscosity-Gravity Constant. Another rating method based upon the physical properties of the fuel oil has been proposed by Moore and Kaye of the Union Oil Co. This relation is based upon the A.P.I. gravity of the oil and its viscosity. There seems to be a fairly good correlation between this viscosity-gravity constant and the ignition lag of a fuel oil as given by the cetane rating.

Doped Fuels. In the case of gasoline, lead (*tetra ethyl*) is being used to give gasoline a high octane rating. In the case of fuel oils, ethyl nitrate or amyl nitrate is added to the fuel in order to raise the cetane number. Only a small amount, ½% to 1%, is required with most fuels, but fuels of an extremely low cetane number may require from 3% to 5% of dope. But the addition of ethyl nitrate or amyl nitrate adds considerably to the cost of the fuel; hence a fairly good fuel of a sufficiently high cetane rating is actually cheaper than a low grade fuel that has been doped. Experiments have shown that an ignition temperature of 680° F., per-

TABLE III—A. P. I. GRAVITY SCALE

Gravity		Density	Total heat of combustion at constant volume, Q_v			Net heat of combustion at constant pressure, Q_p		
Deg. A. P. I. at 60°F.	Specific at 60°/60° F.	Lb. per gal.	Cal./g	B.t.u./ lb.	B.t.u./ gal.	Cal./g	B.t.u./ lb.	B.t.u./ gal.
10	1.0000	8.337	10,300	18,540	154,600	9,740	17,540	146,200
11	0.9930	8.279	10,330	18,590	153,900	9,770	17,580	145,600
12	0.9861	8.221	10,360	18,640	153,300	9,790	17,620	144,900
13	0.9792	8.164	10,390	18,690	152,600	9,810	17,670	144,200
14	0.9725	8.108	10,410	18,740	152,000	9,840	17,710	143,600
15	0.9659	8.053	10,440	18,790	151,300	9,860	17,750	142,900
16	0.9593	7.998	10,470	18,840	150,700	9,880	17,790	142,300
17	0.9529	7.944	10,490	18,890	150,000	9,900	17,820	141,600
18	0.9465	7.891	10,520	18,930	149,400	9,920	17,860	104,900
19	0.9402	7.839	10,540	18,980	148,800	9,940	17,900	140,300
20	0.9340	7.787	10,570	19,020	148,100	9,960	17,930	139,600
21	0.9279	7.736	10,590	19,060	147,500	9,980	17,960	139,000
22	0.9218	7.686	10,620	19,110	146,800	10,000	18,000	138,300
23	0.9159	7.636	10,640	19,150	146,200	10,020	18,030	137,700
24	0.9100	7.587	10,660	19,190	145,600	10,040	18,070	137,100
25	0.9042	7.538	10,680	19,230	145,000	10,050	18,100	136,400
26	0.8984	7.490	10,710	19,270	144,300	10,070	18,130	135,800
27	0.8927	7.443	10,730	19,310	143,700	10,090	18,160	135,200
28	0.8871	7.396	10,750	19,350	143,100	10,110	18,190	134,600
29	0.8816	7.350	10,770	19,380	142,500	10,120	18,220	133,900
30	0.8762	7.305	10,790	19,420	141,800	10,140	18,250	133,300
31	0.8708	7.260	10,810	19,450	141,200	10,150	18,280	132,700
32	0.8654	7.215	10,830	19,490	140,600	10,170	18,310	132,100
33	0.8602	7.171	10,850	19,520	140,000	10,810	18,330	131,500
34	0.8550	7.128	10,860	19,560	139,400	10,200	18,360	130,900
35	0.8498	7.085	10,880	19,590	138,800	10,210	18,390	130,300
36	0.8448	7.043	10,900	19,620	138,200	10,230	18,410	129,700
37	0.8398	7.001	10,920	19,650	137,600	10,240	18,430	129,100
38	0.8348	6.960	10,940	19,680	137,000	10,260	18,460	128,500
39	0.8299	6.920	10,950	19,720	136,400	10,270	18,480	127,900
40	0.8251	6.879	10,970	19,750	135,800	10,280	18,510	127,300
41	0.8203	6.839	10,990	19,780	135,200	10,300	18,530	126,700
42	0.8155	6.799	11,000	19,810	134,700	10,310	18,560	126,200
43	0.8109	6.760	11,020	19,830	134,100	10,320	18,580	125,600
44	0.8063	6.722	11,030	19,860	133,500	10,330	18,600	125,000
45	0.8017	6.684	11,050	19,890	132,900	10,340	18,620	124,400
46	0.7972	6.646	11,070	19,920	132,400	10,360	18,640	123,900
47	0.7927	6.609	11,080	19,940	131,900	10,370	18,660	123,300
48	0.7883	6.572	11,100	19,970	131,200	10,380	18,680	122,800
49	0.7839	6.536	11,100	20,000	130,700	10,390	18,700	122,200

TABLE IV—CHARACTERISTICS OF FUEL OIL

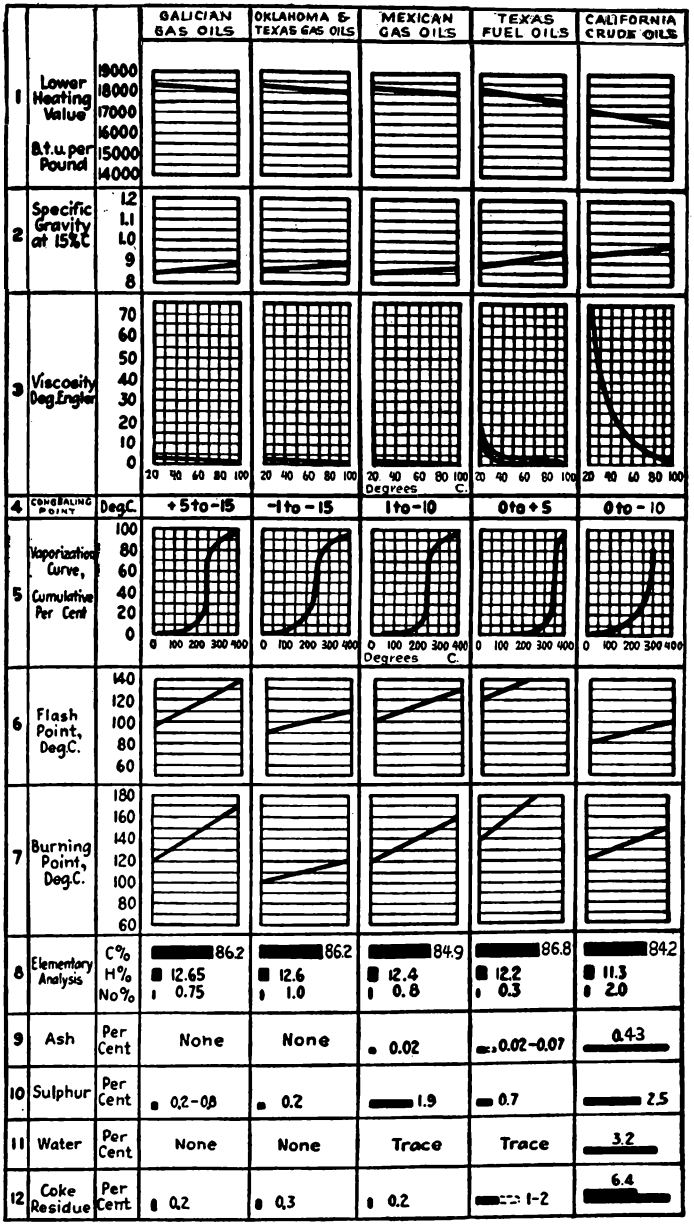

haps the lowest advisable for positive results, can be lowered to 570° F. if 3% of dope is added to the fuel.

Various oil companies are experimenting with dopes suitable for Diesel fuels, and while, for the time being at least, the cost of the dopes is rather prohibitive, cheaper compounds may be expected within the near future.

The Associate Equipment Co. of Britain, makers of the A.E.C. Diesel engine, made tests with doped fuels, using their standard A.E.C. engines, which incorporates the Acro-Bosch patented air chamber, Fig. 31.

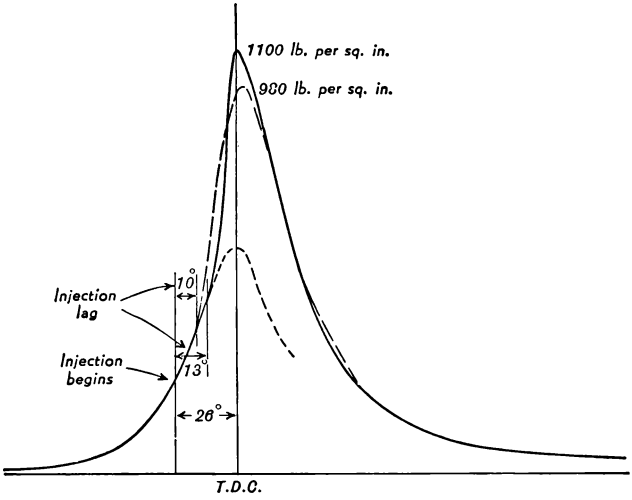

FIG. 31.—The Effect of Doped Fuels.

The indicator diagrams of the two tests are superimposed so as to show the effect. Both tests were made at an engine speed of 1000 r.p.m. and the brake-mean-effective-pressure was 83.5 lb. per sq. in. in both cases. The fuel used for the tests was an Asiatic crude of standard specifications except that in one case 5% of ethyl nitrate was added. The solid line shows the result obtained with the fuel as delivered; the dotted line indicates the result achieved by doping the fuel by the addition of ethyl nitrate.

A great improvement in the performance was thus obtained. Whereas the combustion pressure rose to 1100 lb. per sq. in. with the ordinary fuel, a pressure of but 980 lb. per sq. in. resulted from

the addition of the dope. Fuel injection began in both tests 26° before T.D.C., and the standard fuel showed a delay angle of 13°, whereas the doped fuel ignited with a lag of but 10°.

From the foregoing it seems safe to assume that Diesel engine fuel practice will follow two different paths in the not too distant future. On the one hand, oils of a good ignition quality (short ignition delay) will be marketed un-doped, but, on the other hand, coal-tar distillations and vegetable oils (not readily ignitable) will be compounded in order to be competitive Diesel fuel.

Boiling Point of Oils. The boiling point of fuel oil is of practically no importance, except that the more volatile constituents

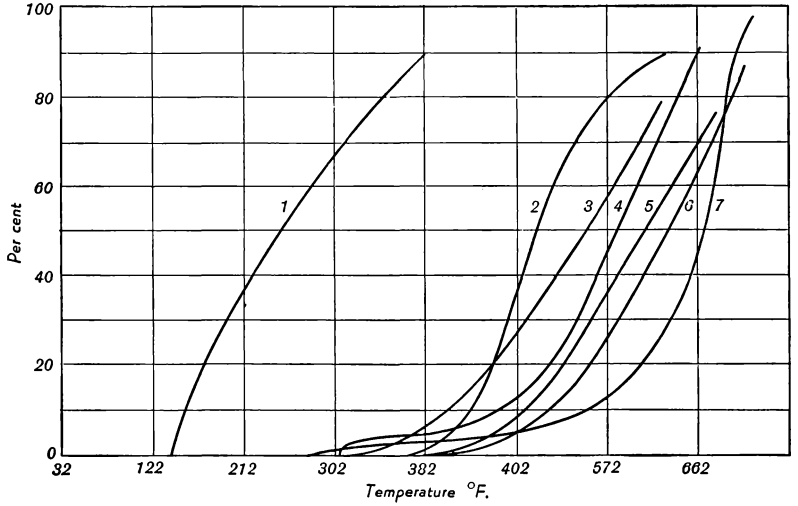

FIG. 32.—Boiling Points of Various Fuel Oils.

1. Serbian wood-tar oil.
2. U. S. crude.
3. German paraffin oil.
4. Mexican crude I.
5. South African crude.
6. Mexican crude II.
7. Argentine crude.

(gasoline content) should be removed from the crude before attempting to use the oil as Diesel engine fuel.

The initial boiling point (for the lighter constituents) and the final (for the heavier constituents) for various fuels are given in Fig. 32.

The curves in Fig. 32 show what percentage of each of the various oils reaches the boiling point at different temperatures.

The boiling point of the heavier constituents is, in most cases, less than twice that of the lighter constituents, except in the cases of 1, 4, and 7. For all practical purposes, the boiling point of the fuel is of no moment, since oils suitable for Diesel engines and those unsuitable may have similar boiling points.

Oils of a "low" boiling point, which, therefore, permit "easy" gasification, have long been considered desirable for Diesel engine fuel. This erroneous conception is still held by some who attempt to pre-heat the fuel before injecting it into the combustion chamber of the engine, hoping thereby to secure a shorter ignition delay with quicker and more complete combustion.

Shale Oil. The limitations of the oil reserves of the United States, as well as the rest of the world, are responsible for the deep interest shown in shale deposits. The U. S. Geological Survey and other groups are studying and experimenting with the extraction of oil from the shale deposits in Colorado, Wyoming, and Utah. It has been estimated that the shale deposits of these regions would permit the production of a hundred billion barrels of crude shale oil. No large scale production has been attempted as yet, partly because various processes are still being experimented with, but mainly because there is as yet no actual shortage of crude oil.

PROBLEMS

1. For the Beaumont oil, determine (a) the heating value based on the heat units produced per pound of carbon and hydrogen burned, and (b) the higher heating value from the A.S.M.E. formula.

2. Determine the above heating values for the Pennsylvania light oil.

3. How many pounds of water vapor (H_2O) would be produced by the combustion of one pound of the Pennsylvania crude oil?

4. How many pounds of water vapor (H_2O) would be produced by the combustion of one pound of the Mexican crude oil?

CHAPTER 5

FUEL ATOMIZATION

Size of Droplets. Fuel is injected into a Diesel engine in the form of a stream consisting of minute fuel particles. Generally speaking, the finest atomization will give the best combustion, other things being equal. A drop of fuel is atomized into droplets; i.e., very minute drops. The minute drop or droplet is generally measured in microns, 1 micron = 1μ = 0.001 millimeter or 0.00004 inch. Experiments have shown that the optimum droplet size for high-speed Diesel engines is of the order of 4μ, or 0.00016 inch.

Of course, this is not always possible, yet it is desirable for really high-speed Diesel engines. In order that the reader may comprehend the extreme minuteness of the fuel droplet, a graphical comparison with human hair is shown in Fig. 33.

Human hair is of a thickness (diameter) of from 0.002 to 0.004 inch. In Fig. 33, *A* indicates hair of 0.002, *B* a hair of 0.004 and *C* a fuel droplet of 0.00016 inch diameter (4 μ); all sizes being magnified 500 times.

A fuel droplet, however small, consists of a number of molecules, arranged in outer and inner layers. In fuel oil—in fact in all liquids—the cohesive forces give rise to two characteristics, viscosity and surface tension. Fig. 34 shows an oil-droplet consisting of a number of molecules.

The unbalanced force acting on the outer layer of the molecules pulls them inward, and thus they act as a skin around the droplet. It is obvious that viscosity in a liquid results from the resistance to pulling apart or separation of the molecules. Studies of the molecular theory have shown that the distance between molecules increases as the temperature is increased. This increased distance results in a smaller cohesive force between the molecules. The smaller the fuel droplet, the more easily and quickly self-ignition takes place

within the engine's cylinder. This phenomenon, the separation of molecules by means of heat, is perhaps the reason why some Diesel operators still insist upon preheating the fuel oil for quicker com-

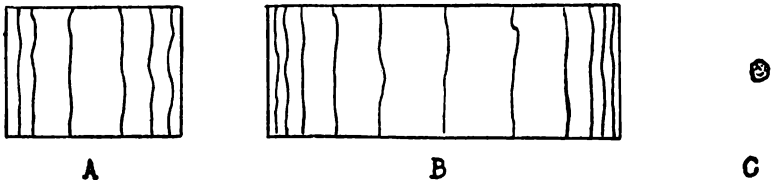

FIG. 33.—Comparative Fuel Droplet Size.

bustion. All that pre-heating (short of boiling) can do is to separate the molecules. Since the separation of the molecules also lowers the viscosity, pre-heated oil flows more readily within the pumps and nozzles. It does not, however, add to the gasification of the fuel, and gasification is an unnecessary, and in actual practice, unattainable feature.

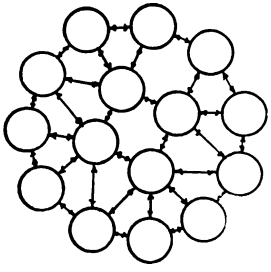

FIG. 34.—Molecules Within a Fuel Droplet.

Droplet Size From Nozzles. The atomization of the fuel is of prime importance in Diesel engine practice, and extensive research work is being carried on to obtain optimum values. Wöltjen * has made elaborate tests in order to determine to what extent the injection pressure affects the size of the oil droplets. A steel bomb containing air, and a liquid under a pressure of 450 lb. per sq. in. was used for the tests. The results of these tests are shown in Figs. 35 and 36.

The oil droplet sizes shown in Fig. 35 were obtained with multi-hole nozzles. The droplet sizes of Fig. 36 were obtained with single-hole nozzles. Comparing the results, it is of note that with a multi-hole nozzle and a pressure of but 975 lb. per sq. in. a droplet size of 13.75 μ was obtained, which, with a single-hole nozzle, required an injection pressure of 3750 lb. per sq. in. Also, a multi-hole nozzle and a pressure of 1125 lb. per sq. in. resulted in a droplet size of but 4.37 μ, which required a pressure of 4500 lb. per sq. in. when a single-hole nozzle was used.

* C. Wöltjen, Laboratories of the Technical Institute at Darmstadt.

A pintle type nozzle injecting at a pressure of 2250 lb. per sq. in. produced a droplet size of 13.75 μ, which, with a single-hole nozzle, required a pressure of 3750 lb. per sq. in., but if injected

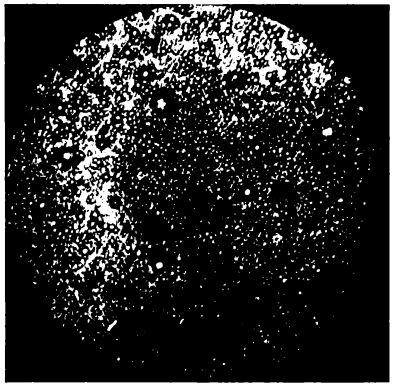

A

Pressure 1,125 lb. per sq. in.
Droplet size 4.37 μ.

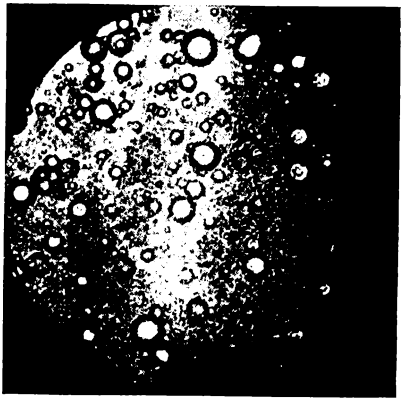

B

Pressure 975 lb. per sq. in.
Droplet size 13.75 μ.

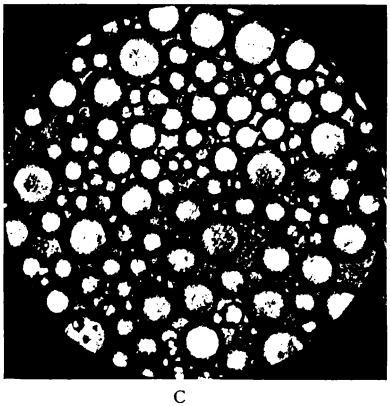

C

Pressure 750 lb. per sq. in.
Droplet size 4.37 μ.

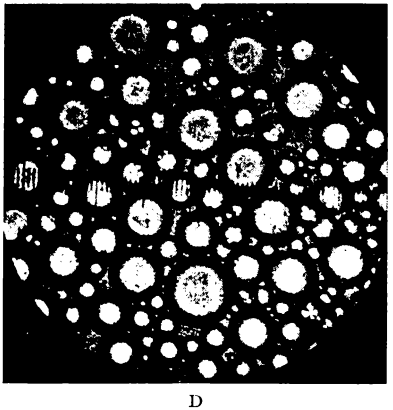

D

Pressure 600 lb. per sq. in.
Droplet size 25 μ.

FIG. 35.—Multi-hole Nozzle Sprays.

with a multi-hole nozzle, but 975 lb. per sq. in. Figure 41 illustrates the result with a pintle nozzle.

Droplets of less than 5 μ in diameter are known as emulsion. In

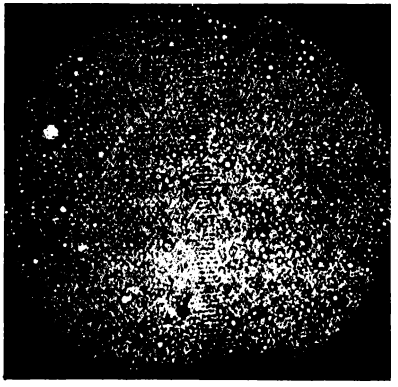

A

Pressure 4,500 lb. per sq. in.
Droplet size 4.37 μ.

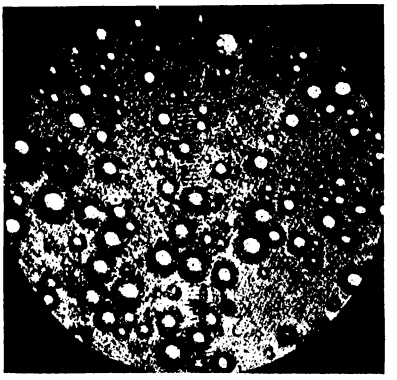

B

Pressure 3,750 lb. per sq. in.
Droplet size 13.75 μ.

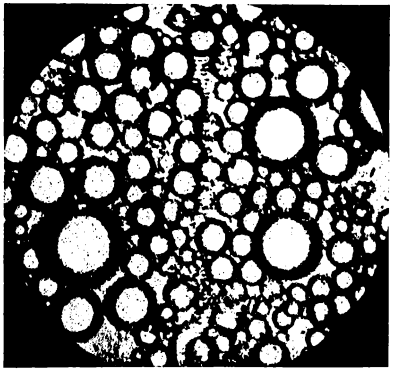

C

Pressure 3,000 lb. per sq. in.
Droplet size 20.0 μ.

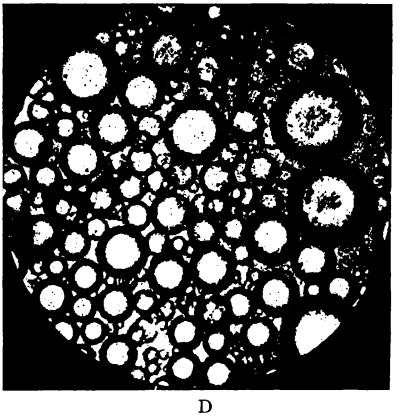

D

Pressure 2,250 lb. per sq. in.
Droplet size 26.25 μ.

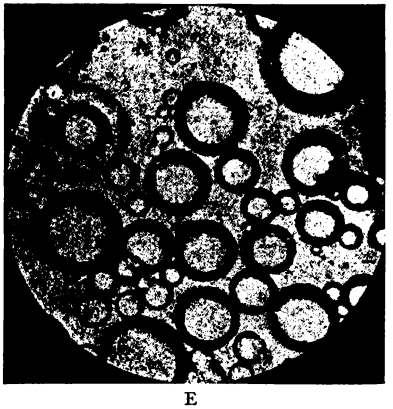

E

Pressure 1,500 lb. per sq. in.
Droplet size 33.75 μ.

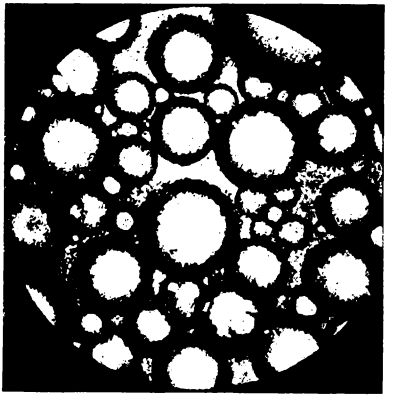

F

Pressure 750 lb. per sq. in.
Droplet size 40.0 μ.

FIG. 36.—Single-hole Nozzle Sprays.

Fig. 35*A* is shown an emulsion of the size of 4.37 μ which was secured with an injection pressure of 1125 lb. per sq. in.

The droplets in Figs. 35 and 36 are not of uniform size, but range from very minute to comparatively large droplets. In designating the μ size, the largest percentage of droplets of a given size has been chosen to designate the droplet size.

Since experiments have shown that it is not possible to produce droplets all of one given size, Sass * determined by tests the percentage of droplets of various sizes. In Fig. 37 is illustrated how the "average droplet size" is affected by the injection pressure.

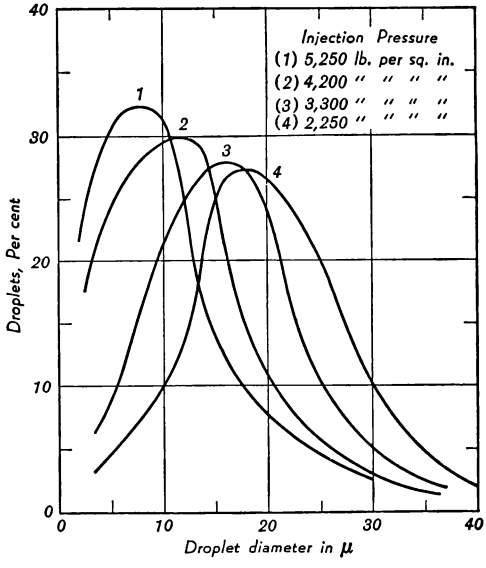

FIG. 37.—Droplet Size vs. Injection Pressure.

For these tests, Sass used single-hole nozzles of 0.0224 in. diameter. Compressions of 150 lb. per sq. in. (injection chamber). Speed of fuel-pump shaft, 90 r.p.m.

Note that, with an injection pressure of 2250 lb. per sq. in., 3 per cent of the droplets were of the size of 3½ μ, and 3 per cent of 40 μ size, the largest percentage (27 per cent) of 17 μ size. On the other hand, with an injection pressure of 5250 lb. per sq. in. 21 per cent of the droplets were of the size of 2 μ, 3.3 per cent of the 30 μ size, and the average (32 per cent) of approximately 8 μ.

This then indicates that injection pressure is of prime importance for adequate atomization, especially when single-hole nozzles are used. The effect of compression pressure is shown in Fig. 38. For these tests he used single-hole nozzles of 0.0224 in. diameter, injection pressure of 4200 lb. per sq. in., speed of fuel-pump shaft at 90 r.p.m.

* Dr. Friedrich Sass, Kompressorlose Dieselmaschinen, Berlin, 1929.

Thus, a compression pressure of 150 lb. per sq. in. produces smaller droplets than either a pressure of 75 lb. per sq. in. or atmospheric pressure.

The size of the droplet is also affected by the diameter of the nozzle hole as shown in Fig. 39.

The injection pressure used was 4200 lb. per sq. in., the counter pressure in the test chamber 150 lb. per sq. in., speed of fuel-pump shaft 90 r.p.m.

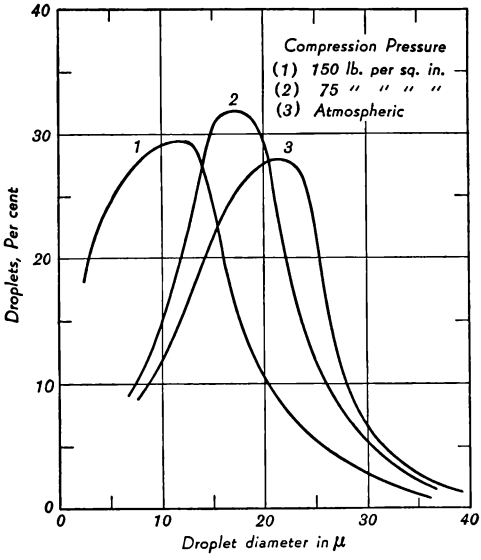

FIG. 38.—Droplet Size vs. Compression Pressure.

It is noteworthy that the maximum droplet diameter produced by the three different nozzle sizes is well over 30 μ in all cases, whereas the minimum droplet size is below 2½ μ for the two smaller nozzle diameters, the large diameter (No. 3) nozzle being unable to eject droplets of less than 6 μ size.

The speed of the fuel-pump shaft, and hence the velocity of the fuel-pump piston, also affects the droplet size as shown in Fig. 40.

In these tests the constants were: Single-hole nozzle of 0.0224 in dia., injection pressure 4200 lb. per sq. in., counter pressure at test chamber, 150 lb. per sq. in.

This indicates that the droplet size decreases slightly with an increase in fuel-pump speed insofar as minimum and average size is concerned; the proportion of maximum droplet size is considerably reduced by an increase in fuel-pump speed.

All of the experiments were made at fuel-pump speeds of 90 r.p.m. or less. Just what happens at fuel-pump speeds of 900 and 1800 r.p.m. is open to conjecture. That the fuel droplets reduce themselves in size at increased delivery speeds seems certain, but to what extent and in what proportion to the increased speed cannot be

said. It is safe to assume, however, that at high speeds the droplets are of sufficient minuteness for almost instantaneous combustion, for if this were not so, high-speed Diesel engines would be nonexistent.

From the tests thus far made, no graphs could be plotted showing the dependence of atomization upon the four variables of Figs. 37–40. But since these tests have established the percentage of average droplet sizes under four variable conditions, sufficient information can be deduced therefrom as to the possible behavior of fuel droplets within the combustion chamber of a Diesel engine in actual operation.

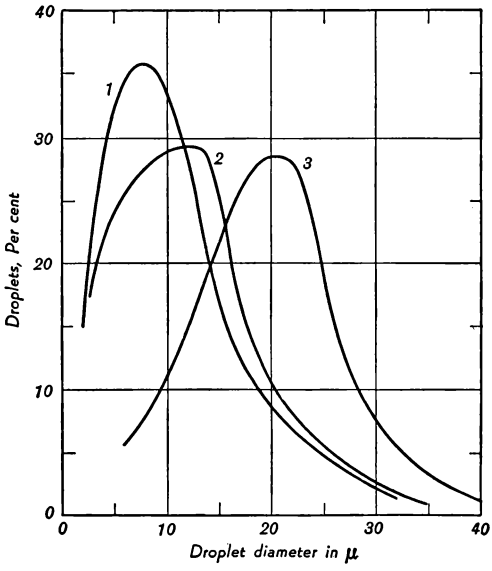

FIG. 39.—Droplet Size vs. Nozzle Hole Diameter.

1—4-hole nozzle, each 0.0157″ diameter.
2—2-hole nozzle, each 0.0224″ diameter.
3—single-hole nozzle, 0.0315″ diameter.

Permissible Droplet Size. Higher temperatures would reduce the ignition delay, but for practical purposes, fine atomization is the fundamental requirement.

Obviously, it is desirable to secure the very smallest droplets possible, but multi-hole nozzles having very tiny holes are subject to clogging. Thus the designer is forced to compromise. The permissible droplet size depends upon the engine speed and upon the temperature within the combustion chamber, the latter in turn depending upon the compression ratio. Thus it may be said, that slow-speed engines can successfully handle comparatively large droplets, and engines of high compression ratios and hence high temperatures do not require fine atomization. Just what may and may not be attempted is shown in Figs. 42 and 43, giving sizes of droplets permissible according to engine speed and temperature. The sizes given are not optimum sizes

but permissible sizes. It is understood that the finest atomization attainable in any given case, with not too frequent clogging of the nozzle holes, should be adopted; except it must be remembered that the large droplets give better penetration in the cylinder.

The size of the droplets depends not only upon the type of nozzle used, but also upon the injection pressure.

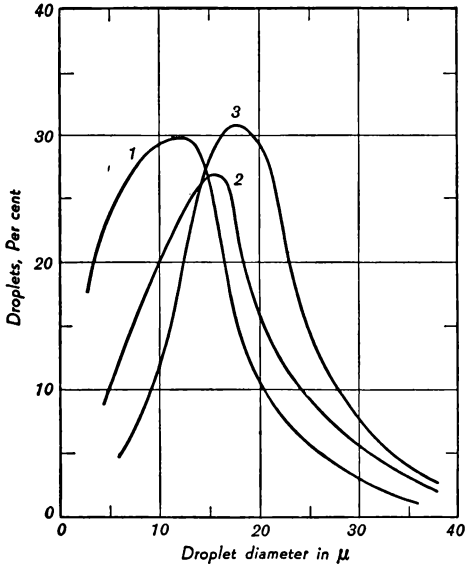

FIG. 40.—Droplet Size vs. Pump Speed.

1—Pump-shaft speed 90 r.p.m.
2—Pump-shaft speed 70 r.p.m.
3—Pump-shaft speed 45 r.p.m.

The results of Wöltjen's tests are shown in Fig. 44. It will be noted that the size of the droplets is proportional to the injection pressure, and also that the injection velocity rises in approximate proportion to the injection pressure, which in turn determines the penetrating power of the fuel-stream.

Penetration and Compression Pressure. The effect of the compression pressure within the cylinder upon the penetrating power of the incoming oil-stream is shown in Fig. 45. It is of note that with a low compression-pressure (15 lb. per sq. in.), injection pressures of 2100 and 8400 lb. per sq. in. give practically the same result, a stream length of 5 inches. But with a compression pressure of 330 lb. per sq. in. a fuel stream injected at a pressure of 2100 lb. per sq. in. has penetrating power of but 3⅜ inches, whereas a fuel stream with a pressure of 8400 lb. per sq. in. has a penetrating power of almost 5 inches.

Penetration and Injection Pressure. The effect of the injection pressure upon the depth of penetration of the fuel stream and its speed (time) is shown in Figs. 46 and 47. With an injection pressure of 2100 lb. per sq. in., the depth of the penetration and the

velocity of the streams follow exponential laws (Fig. 46), beginning with the very moment of injection, the angle (time) of the curva-

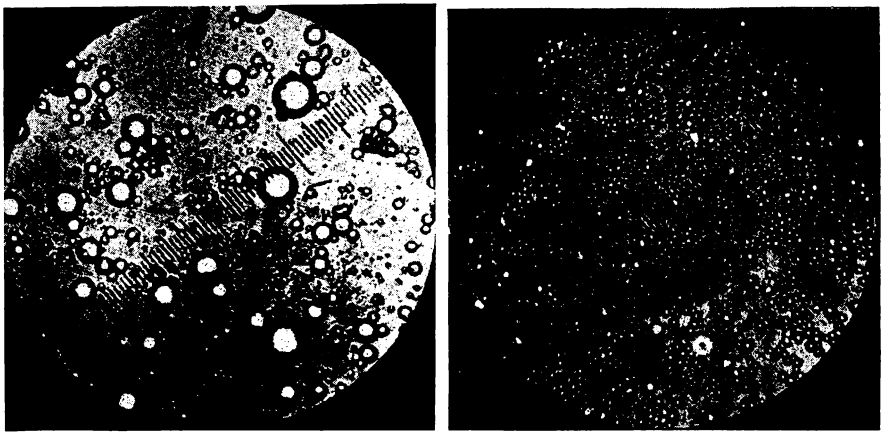

A. Injection pressure, 2,250 lb. per sq. in. Droplet size, 13.75.

B. Emulsion droplets, 4½.

FIG. 41.—Pintle Nozzle Sprays.

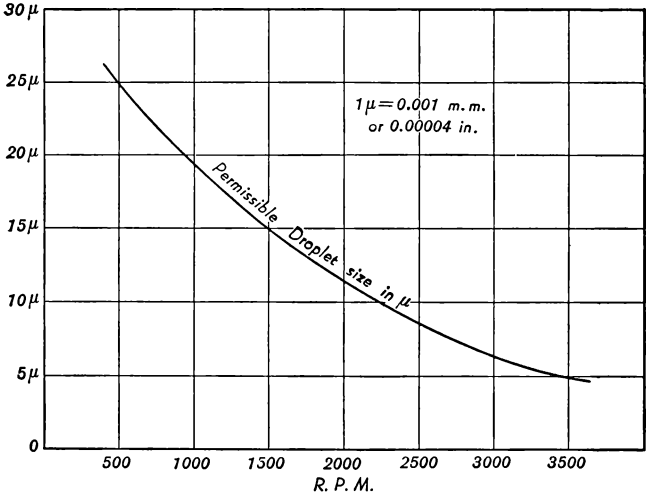

FIG. 42.—Permissible Droplet Size at Various R.P.M.

tures of the fuel streams being influenced by the compression pressures existing within the cylinder. With an injection pressure of 8400 lb. per sq. in. (Fig. 47), on the other hand, the fuel streams

follow the same linear path up to a penetration depth of 1.4 inches and at equal velocity. From then on, the 3 streams, meeting higher

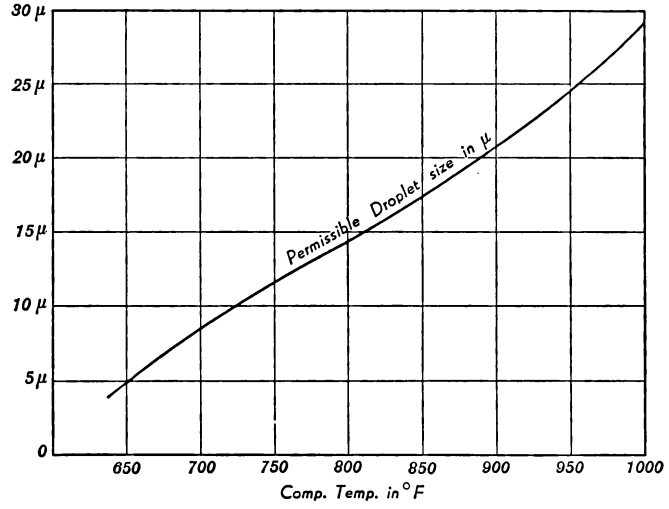

FIG. 43.—Permissible Droplet Size at Various Temperatures.

compression pressures, diverge at different angles, the curvatures de pending upon the pressures encountered.

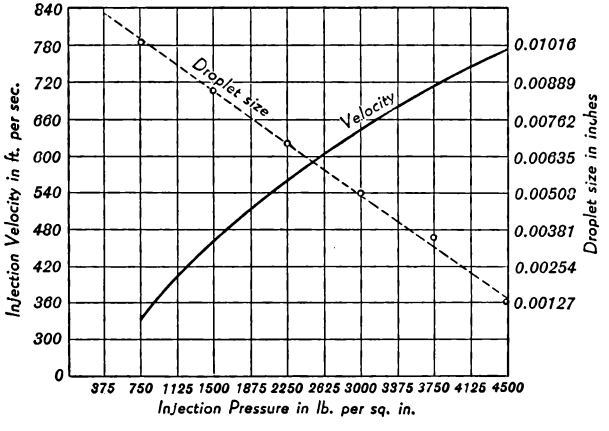

FIG. 44.—Droplet Size vs. Injection Pressure.

The fuel droplets injected into the combustion or auxiliary chamber, depending upon the engine's construction, must possess sufficient

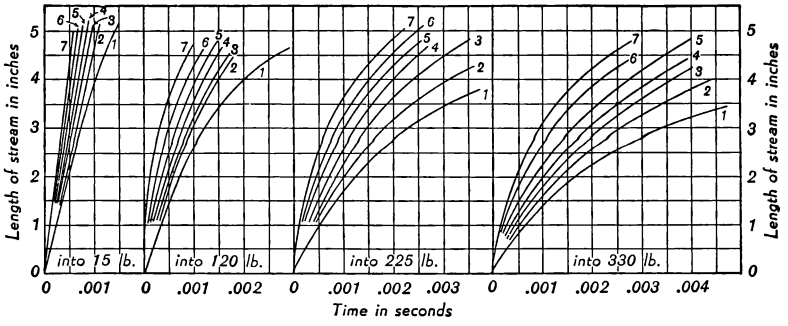

FIG. 45.—Fuel Stream Penetrating Power.

1 = Injection pressure of 2,100 lb. per sq. in.
2 = Injection pressure of 3,150 lb. per sq. in.
3 = Injection pressure of 4,200 lb. per sq. in.
4 = Injection pressure of 5,250 lb. per sq. in.
5 = Injection pressure of 6,300 lb. per sq. in.
6 = Injection pressure of 7,350 lb. per sq. in.
7 = Injection pressure of 8,400 lb. per sq. in.

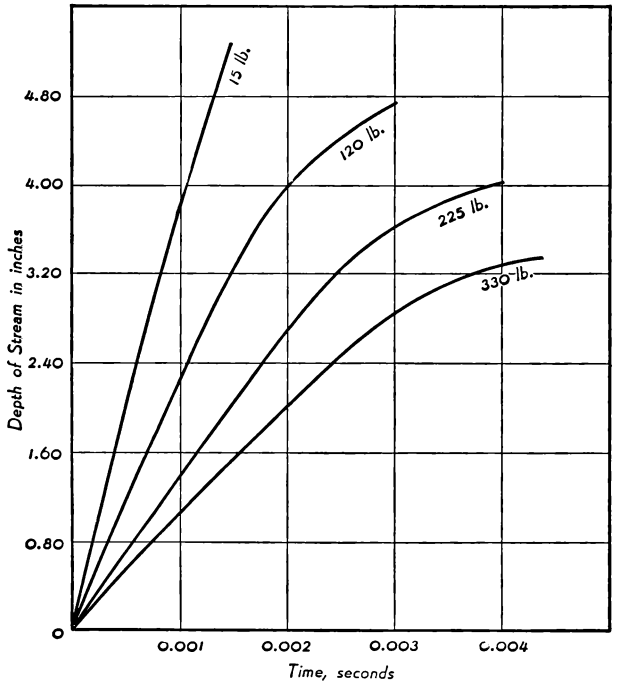

FIG. 46.—Fuel Streams at 2,100 lb. per sq. in. Pressure.

penetrating power so as to mix intimately with the air in the chamber rather than congregate in a mass somewhere near the nozzle.

The limited penetrating power of small droplets within highly compressed air explains why some constructors of open-chamber (di-

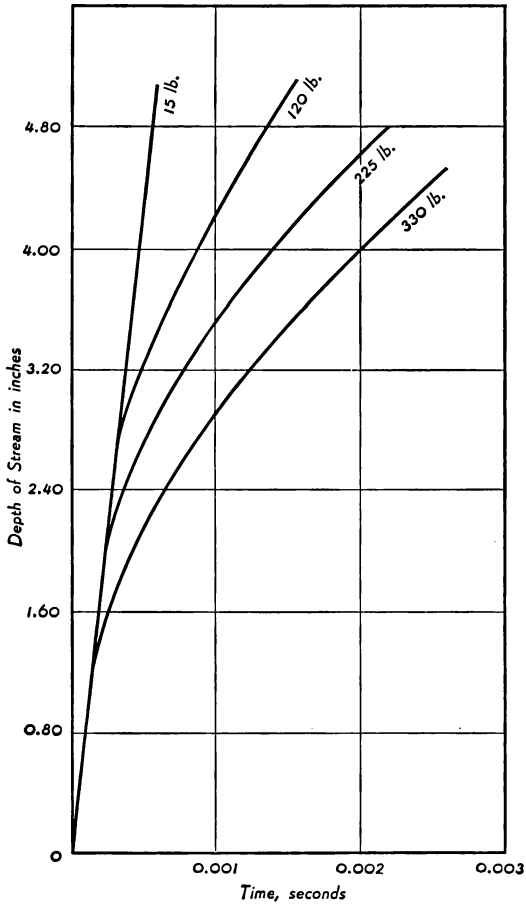

FIG. 47.—Fuel Streams at 8,400 lb. per sq. in. Pressure.

rect-injection) Diesel engines make use of twin nozzles, and in the case of the Junkers aviation engines, four nozzles.

The behavior of fuel streams under various conditions has been investigated by E. G. Beardsley and the results he obtained are shown in Figs. 48 to 51. The penetrating power of the fuel stream

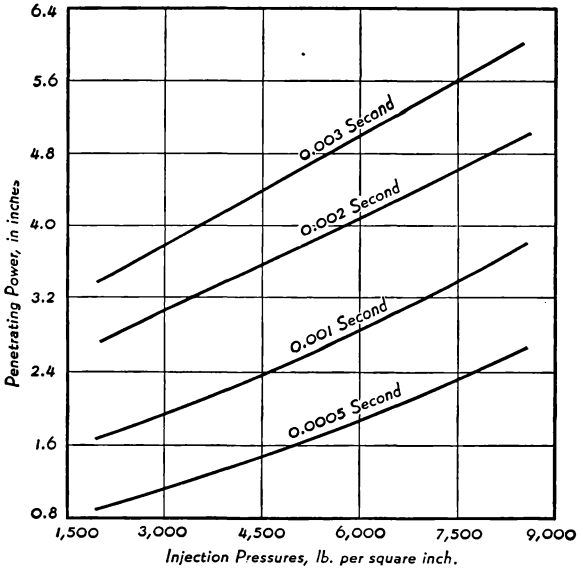

FIG. 48.—Penetration and Injection Pressure.

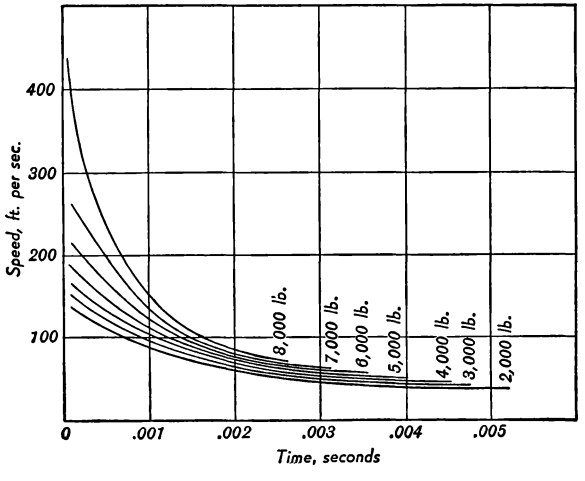

FIG. 49.—Fuel Stream vs. Injection Pressure.

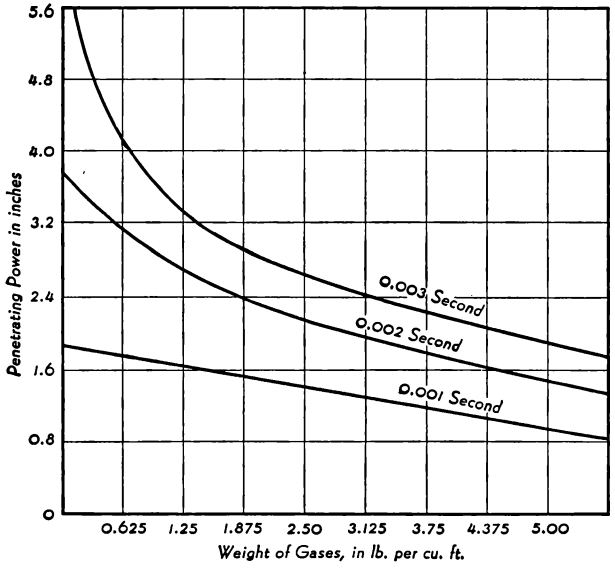

FIG. 50.—Penetrating Power vs. Weight of Gas.

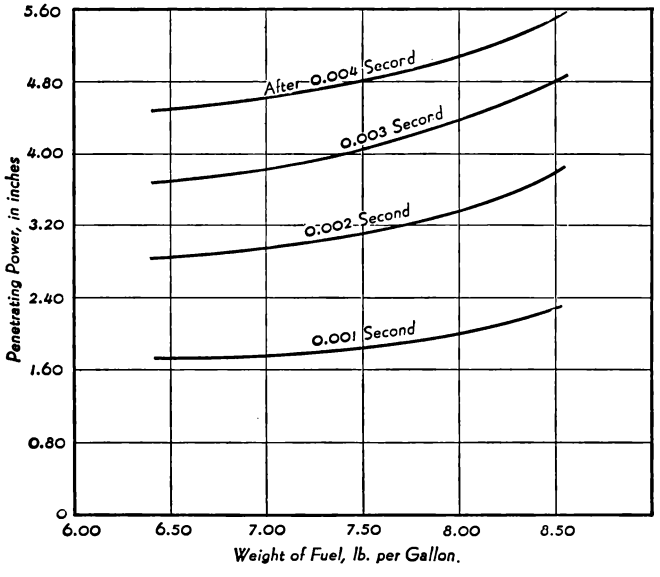

FIG. 51.—Specific Weight of Fuel vs. Penetrating Power.

at various injection pressures is shown in Fig. 48. The constants for these tests were: compression pressure 200 lb. per sq. in.; specific gravity of the fuel 34.8° A.P.I.; nozzle opening 0.0156 in. The curves show the results obtained after 0.0005 to 0.003 of a second.

High-speed Diesel engines require injection of fuel under high pressure so that the injection may be completed within the short space of time allowed for the injection period. Fig. 49 shows the speed of the tip of the fuel stream against time, the compression

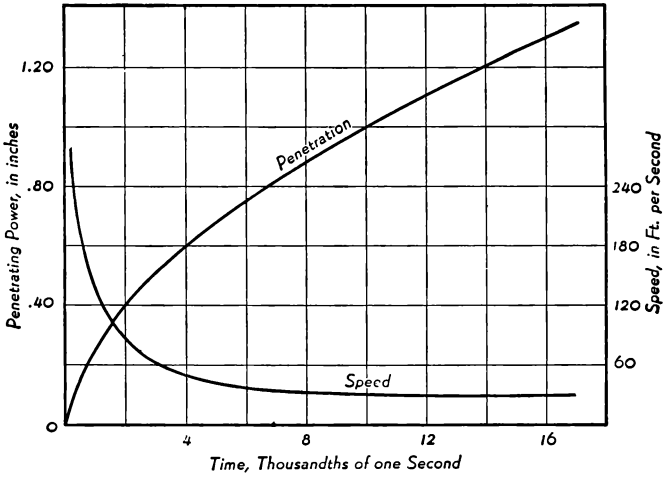

FIG. 52.—Penetrating Power and Speed of Fuel Stream Against Time.

pressure being 300 lb. per sq. in., the fuel injection pressure varying from 2000 to 8000 lb. per sq. in.

It will be observed that the increase in speed is somewhat gradual with injection pressures of from 2000 to 7000 lb. per sq. in., but rises sharply with an injection pressure of 8000 lb. per sq. in.

Just how the compression pressure, and hence weight of the gases, affects the penetrating power of the fuel stream is shown in Fig. 50. The constants for these tests were: Injection pressure, 8225 lb. per sq. in.; specific gravity of fuel, 34.8° A.P.I.; nozzle opening, 0.0222 in. diameter.

The specific weight of the fuel also affects the penetrating power of the fuel stream as is shown in Fig. 51. The constants for these

tests were: Compression pressure, 210 lb. per sq. in.; injection pressure, 8225 lb. per sq. in.; nozzle opening, 0.0222 in. diameter.

The penetrating power of fuel streams was also investigated by

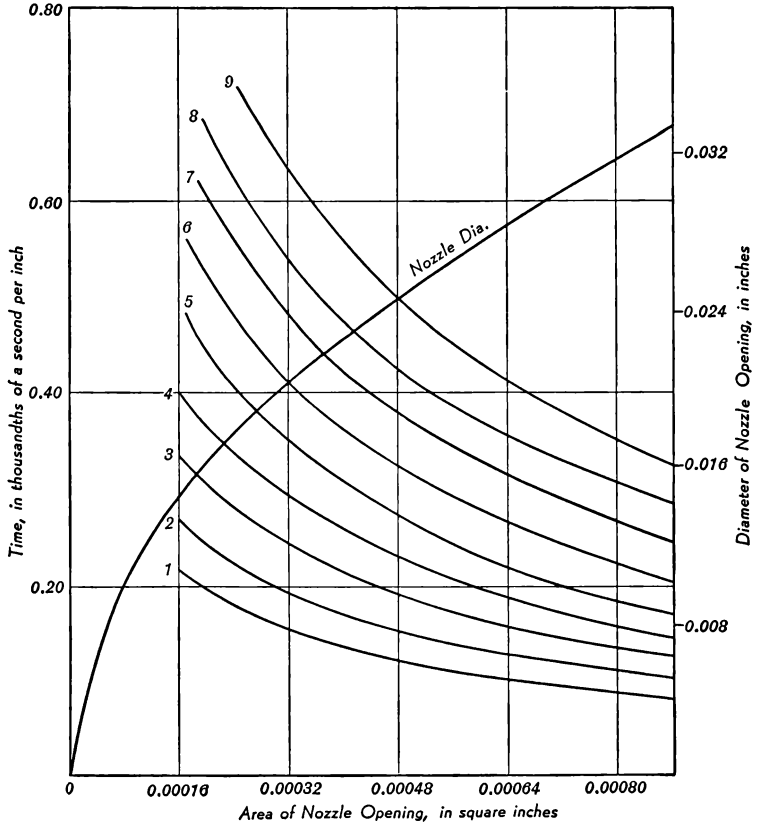

FIG. 53.—Nozzle Diameter vs. Depth of Penetration.

Depth of fuel penetration

(1) 7.09 Inches
(2) 7.87 Inches
(3) 8.66 Inches
(4) 9.45 Inches
(5) 10.24 Inches
(6) 11.02 Inches
(7) 11.81 Inches
(8) 12.60 Inches
(9) 13.39 Inches

Sass by means of motion pictures. The results he obtained are plotted in Fig. 52. For these tests, Sass maintained a compression pressure of 220 lb. per sq. in. and an injection pressure of 4410 lb. per sq. in.; the nozzle opening was 0.0245 in. diameter and the

length of the nozzle channel was 0.090 in. The specific weight of the fuel used was 30.6° A.P.I.

Sass also made tests to determine the optimum nozzle openings for a given depth of penetration. His findings are plotted in Fig. 53.

The curves are especially useful when laying out a combustion-chamber design, since the relations between nozzle diameter, depth of penetration and time required to reach a given depth can readily be ascertained.

The compression pressure of 147 lb. per sq. in. is perhaps but 1/3 of what would be met in actual practice; and a pump speed of 90 r.p.m. (equivalent to an engine speed of 180 r.p.m.) is but 1/10 to 1/20 of that of a really high-speed engine; hence allowances must be made to obtain the actual depth obtainable in high speed performance.

The constants for these tests were: Injection pressure, 4116 lb. per sq. in.; compression pressure, 147 lb. per sq. in.; speed of fuel pump 90 r.p.m. and specific weight of fuel, 30.6° A.P.I.

From the foregoing results, it can be seen that the penetration of the fuel stream, and its velocity are seriously influenced by such factors as the injection pressure, compression pressure, density of the compressed air, specific weight of the fuel and the size of the injection nozzle. Even though several of these tests were made under conditions approximating very slow-speed engine operation, they should serve as a relative guide to the results obtainable by the variation of any of the factors mentioned.

Nozzle Design and Penetration. It has been shown that the size of the individual droplets depends upon the injection pressure and upon the type of nozzle used. However, the stream formation, the stream of droplets injected, depends upon the compression pressure existing within the combustion chamber. Miller and Beardsley * made extensive tests to determine the effect compression pressure and nozzle type exert upon the stream of fuel droplets. Experiments were made with air pressures of from 12 to 630 lb. per sq. in. with an injection pressure of 8400 lb. per sq. in. Fuel nozzles of the single-hole type with openings of 0.022 inch diameter and pintle nozzles with openings of 0.040 in. diameter were used in these

* Report, National Advisory Committee for Aeronautics.

tests. The results are shown in Figs. 54 and 55. It is of note that single-hole nozzles produce a long penetrating stream, whereas pintle nozzles deliver a rather blunt stream devoid of penetrating power.

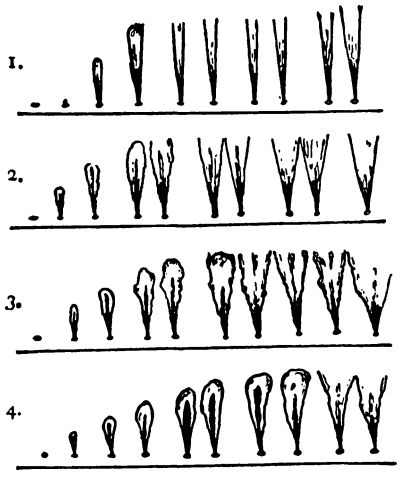

FIG. 54.—Spray from Single-Hole Nozzle, 0.022 in. dia. Opening.

Injection pressure, 8,400 lb. per sq. in.
Air pressure, 1— 15 lb. per sq. in.
2—210 lb. per sq. in.
3—320 lb. per sq. in.
4—630 lb. per sq. in.

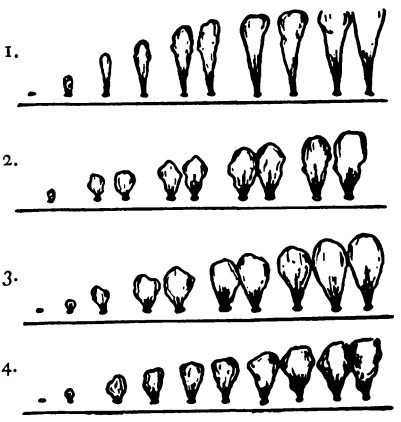

FIG. 55.—Spray from Pintle Nozzle, 0.040 in. dia. Opening.

Injection pressure, 8,400 lb. per sq. in.
Air pressure, 1— 15 lb. per sq. in.
2—210 lb. per sq. in.
3—320 lb. per sq. in.
4—630 lb. per sq. in.

Effect of Heating of Droplets on Combustion. The theory that the injected fuel droplets must be gasified in order to ignite quickly is untenable because:

(1) gasifying a liquid requires first of all vaporizing, which, requiring time, would make engine speeds of over 200 r.p.m. virtually impossible,

(2) the auto-ignition point of some of the constituents of an oil vapor would be far higher than the compression temperature generated in most of today's Diesel engines,

(3) the ignition points of all oil vapors are higher than those of liquid oils, and the latter again are higher than those of solid fuels.

As is well understood, the self-ignition and combustion phenomena are merely the oxidation of hydro-carbon molecules, which has

its inception whenever the latter comes into contact with oxygen molecules. The two form peroxide (moloxide), an unstable compound, which disintegrates and during this process generates heat.

This chemical reaction progresses at a speed proportional to the temperature. The higher the temperature, the quicker the peroxide formation disintegrates and gives off heat by the formation of O_2. The increase in temperature generated immediately affects other fuel droplets within the vicinity and the disintegrating of the constantly forming peroxide takes place at even greater speed until we have visible ignition. The time interval between the commencing of the fuel injection and the final visible ignition constitutes the "delay angle." From then on, combustion within a Diesel engine is substantially similar to that of a carburetted gasoline engine, except for the effects the various open-, ante-, turbulence-, and air-chamber designs may have upon the flame propagation.

Another common error is the assumption that the entire fuel droplet, however small, must in its entirety reach self-ignition temperature. First of all, a fuel droplet, no matter how minute its size, can expose only its outer surface to the action of the heat and to that of the oxygen molecule. Second, the peroxide formation and its subsequent disintegration accompanied by the generation of heat (and the formation of O_2) is quite sufficient for self-ignition, and the actual temperature reached during this process is incomparably higher than that necessary for combustion.

Thus pre-heating the oil droplets as an aid to gasification is unnecessary, except that a slightly pre-heated oil may flow more readily within the pumps and nozzles and produce a finer spray.

The temperature increase insofar as the fuel droplet is concerned is merely a question of heat transfer on the part of the highly compressed hot air. Heat is conveyed from one medium to another by

(a) contact, when both mediums are at rest in relation to one another;
(b) convection, when the medium giving off heat and the medium receiving heat are in motion so that constantly different carbon molecules (fuel droplets) receive heat from the hot compressed air molecules.

This heat transfer is of greatest importance, and the amount of heat thus transferred depends upon the temperature difference between the media and upon the degree of TURBULENCE. The extent of the turbulence is a prime factor in the transfer of heat.

The ignition delay is affected directly by the turbulence of the air-fuel mixture, and the degree of turbulence also controls the ignition temperature to an almost unbelievable extent. In Fig. 56 is shown the effect turbulence has upon the ignition delay as well as upon the temperature necessary for self-ignition.

It is assumed that the delay angle—the auto-ignition of a fuel—is merely a function of heat transfer, and it is also believed that it is

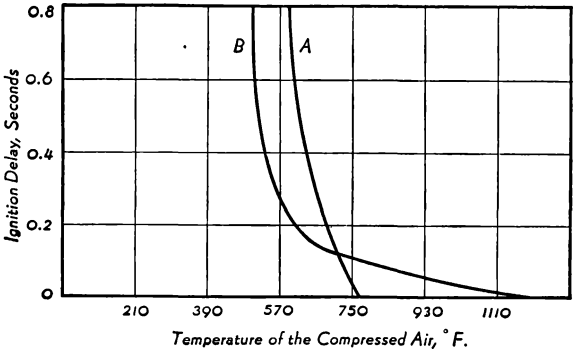

FIG. 56.—Turbulence Affecting Ignition and Reducing Temperature Required.

Line A with turbulence, line B without turbulence; compression pressure used during tests 120 lb. per sq. in.

not the pressure itself, but the density of the air (which rises with the increase in pressure)* that reduces the self-ignition point.

The curve, Fig. 57, depicts the auto-ignition points of paraffinic oils; for aromatic oils, a temperature of from 25 per cent to 60 per cent in excess of the above, is required.

The first part of the chemical reaction taking place within the combustion chamber up to the point of visible ignition is endothermic, while the second part, the combustion of the fuel, is exothermic. In other words, up to the point of visible ignition, heat must be given off by the air to the fuel molecules, and once a flame

*In addition to the pressure, the density is also affected by the temperature. Density is greater at low than at high temperatures. Pre-heating the air to be drawn into an engine, may increase its pressure but will lower its density.

has been formed and combustion is taking place, the disintegration of the peroxides that have been formed gives off heat, which in turn reaches other fuel particles and accelerates further combustion.

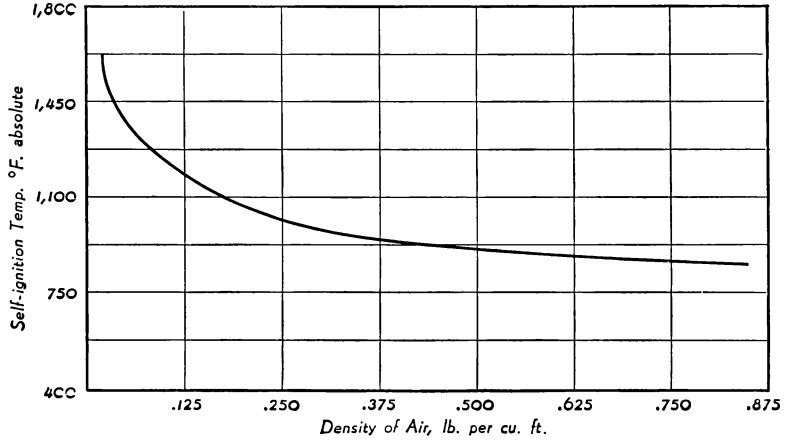

FIG. 57.—Auto-ignition Depending upon Density of Air.

This, then, perhaps explains why some Diesel engines function satisfactorily at highest speeds, for then heat must be transferred quickly, which is only possible with adequate turbulence.

Chapter 6

FUEL PUMPS

The fuel pump is the very heart of the Diesel engine. Although the original patents of Diesel engines called for the direct injection of liquid or solid fuel into the compressed air in the combustion space, the first practical engines used what has been called "air injection," where the fuel was carried into the cylinder by a blast of high-pressure air. This system lacks flexibility, and, in many cases, has been found less efficient than solid injection due to the power required to drive the air compressor.

The development of fuel pumps and injection nozzles capable of producing a fine spray of the fuel, if discharged directly into the combustion space (solid injection), has resulted in the discontinuance of air injection except in some very large engines. This discussion, therefore, will be limited mainly to the "solid" system of injection.

Solid injection is obtained in most cases by either (a) injection pumps, sometimes called the "jerk pump system," or (b) the common rail system. The injection of a predetermined amount of oil into each cylinder by an injection pump is the more common and is used on both large and small engines. The common rail system has a pipe containing high-pressure oil leading to the injection valves of all cylinders. When oil is to be injected into any cylinder, the injection valve is opened by a cam. Examples of this construction will be shown later.

Lang of Germany and Hesselman of Sweden are the originators of the plunger-type of fuel pumps, so universally in use today. The former's attempts were crystallized into the Acro fuel pumps, and they in turn became the Bosch fuel pumps of today. The various types of fuel pumps in use will now be reviewed in detail.

BOSCH FUEL PUMP

Bosch fuel injection pumps are of the plunger type, delivering fuel in measured quantities to the engine cylinders.

The pump plungers (pistons) are operated by a camshaft run-

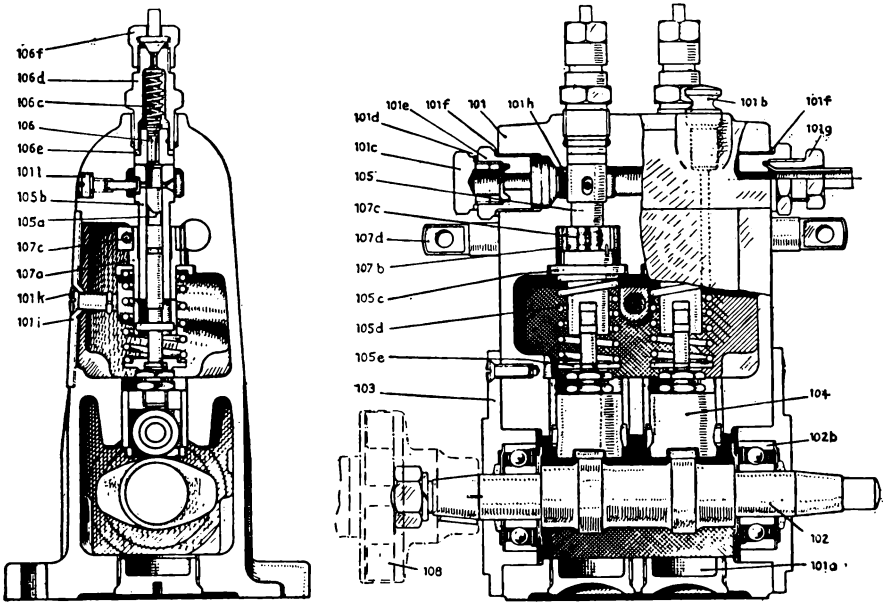

101	= Housing	105	= Pump element
101a	= Closing plug	105a	= Pump plunger
101b	= Lubrication oil gauge rod	105b	= Pump barrel
101c	= Inlet closing plug	105c	= Spring plate, upper
101d	= Joint for 101c	105d	= Spiral spring for plunger
101e	= Inlet connection stud	105e	= Spring plate, lower
101f	= Joint for 101e	106	= Delivery valve and seating
101g	= Inlet connection union nut	106c	= Delivery valve spring
101h	= Suction chamber	106d	= Delivery valve holder
101i	= Inspection cover plate	106e	= Joint for 106d
101k	= Screw with spring ring	106f	= Delivery nipple nut
101l	= Locking screw with joint	107a	= Control sleeve
102	= Ball bearing	107b	= Regulating toothed quadrant
103	= Bearing end plate	107c	= Clamp screw for 107b
104	= Plunger guide	107d	= Control rod
		108	= Coupling

FIG. 58.—Sections of Bosch Pump.

ning in ball bearings in the lower part of the pump housing. The pumps are manufactured in units supplying from 1 to 8 cylinders. At the lowest position of the plunger 105*a* (Fig. 58) the chamber is filled with fuel, which flows in (by two ports) from the common suction chamber connected with the fuel storage tank. In rising,

the plunger closes the two ports in the pump barrel so that the fuel is forced through valve 106, the delivery piping and nozzle holder, whence it is injected by the nozzle into the combustion chamber of the engine.

The delivery of fuel ends when the helical edge *B* of the plunger (Fig. 59, element 2) uncovers the inlet port on the right, when the pressure chamber above the plunger comes into connection with the suction chamber by the vertical groove in the plunger.

To control the output, the plunger is rotated in its barrel by moving the control rod 107*d* (Fig. 58), which is provided with a

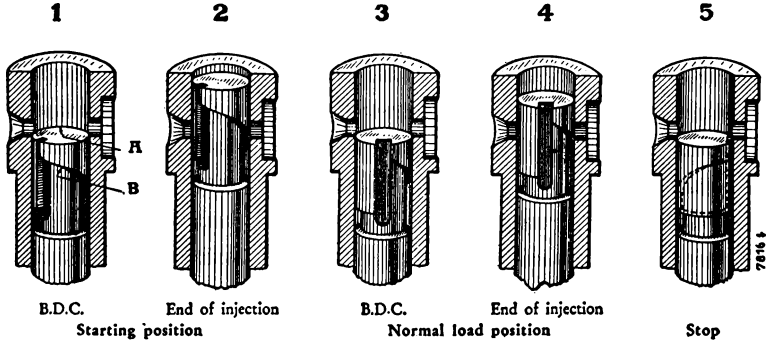

FIG. 59.—Pump Barrel with Various Plunger Positions.

rack engaging in the toothed quadrant of the control sleeve 107*a*. The direction in which the control rod is moved to reduce the delivery is indicated by an arrow and the word "Stop."

Pump Outlet Valve. In Fig. 60 is shown the pump outlet valve. During delivery, the valve opens to the position shown at the right, because no discharge can occur until the cylindrical collar under the valve head is clear of the valve seat. When the by-pass valve relieves the pressure in the pump, the valve returns to its seat, as shown at the left, reducing the amount of oil in the delivery pipe by an amount corresponding to the volume of the cylindrical collar portion of the valve stem. This provides a quick cutoff of injection and tends to prevent dribbling at the nozzle.

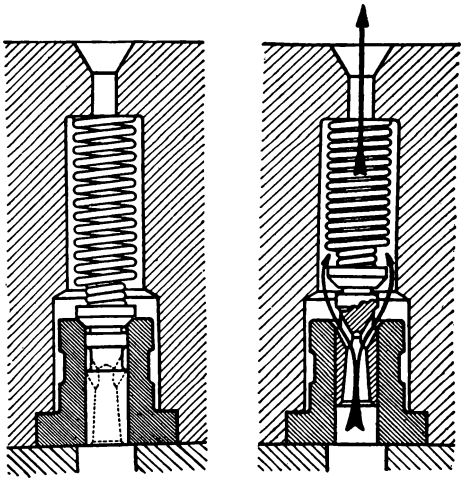

FIG. 60.—Pump Outlet Valve Providing Relief in Delivery Line.

Injection Advance Device. For high-speed automotive engines, an advance device is used. The latter, by slightly turning the pump shaft in relation to the engine shaft, alters the beginning of the injection. Fig. 61. The injection pump shaft is keyed to the splined cone (1) which has helical splines on its outer surface. The drive shaft is fastened at the left end of the half coupling paws (3) which have paw surfaces parallel to the axis of the shaft. The splined bushing (2) connects parts 1 and 3 by having straight grooves mating the paws and helical splines to fit the outer surface of the splined cone. When the adjusting level (5 and 8) is moved, the splined bushing is shifted axially and changes the phase relation of the pump shaft and engine shaft.

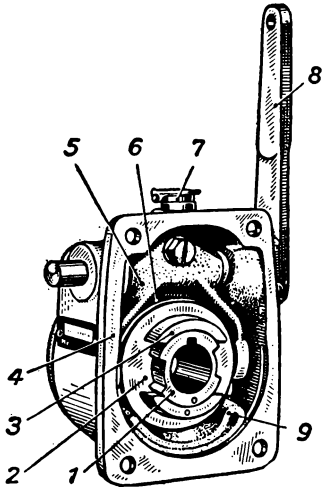

FIG. 61.—Injection Advance Device.

The Governor. In principle, the Bosch governor comprises centrifugally actuated weights complete with suitable linkage which

transmit the motion of the weights to the fuel pump control rod. Fig. 63 shows the governor assembled on the end of the fuel pump.

Minimum Speed Control. The operation of the governor is shown diagrammatically in Fig. 62, the two weights 110*h* are mounted on an extension of the fuel pump camshaft, and to these weights are attached bell crank levers 110*g*, which, in turn, are connected to the floating level 110*r*.

When the engine rotates rapidly, the governor weights tend to fly outward and thus to pull the control rod of the pump towards the "Stop" position, slowing down the engine. These weights are re-

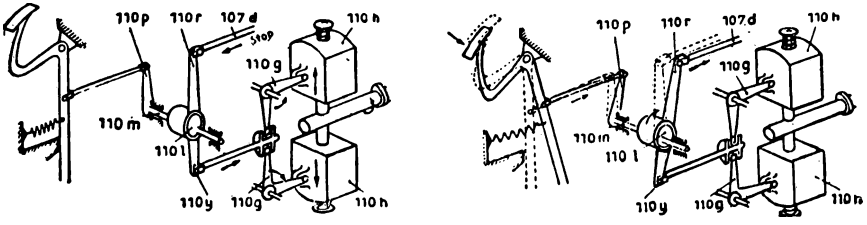

FIG. 62.—Principle of the Governor.

tained by springs so that if the engine speed falls, the springs are able to move the weights inward—thus increasing the delivery of the fuel, and consequently, the speed of the engine.

Combination Automatic-Foot Control. It is generally accepted that for the best engine control it is desirable that the accelerator pedal should operate the pump control rod independently of the governor. Thus, when the pedal is depressed, lever 110*p* (Figs. 62 and 63), and eccentric 110*l* are turned to the right; the floating lever 110*r* is, therefore, moved a corresponding amount and the control rod drawn from the "Stop" position. In other words, it is possible by this arrangement to combine automatic governing with foot control by the floating lever 110*r* having for its pivot in the first case the eccentric 110*l* and in the second case the coupling pin 110*y*.

Maximum Speed Control. From the diagrammatic arrangement shown in Figs. 62 and 63, it is not possible to see without

further explanation how the maximum speed of the engine is limited. Each weight is supplied with an outer spring 110*d* to take charge of the idling speed, and two stronger inner springs for the maximum speed. While idling, the spring 110*d* bears on the weight (Fig. 63), but if the engine speed is increased by the depression of the accelerator pedal beyond idling, the increased centrifugal force produced causes the weights to bear against the spring plate supporting the stronger springs. Throughout the normal speed range of the engine

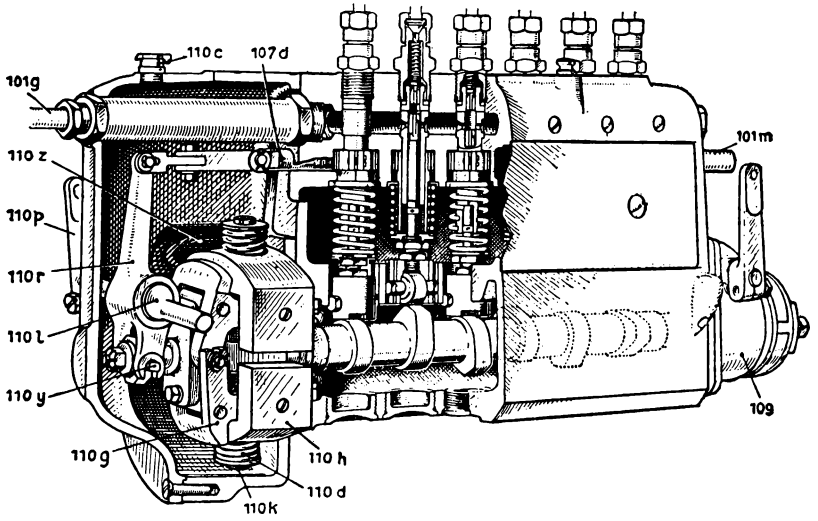

101g = Fuel Inlet Connection
101m = Control Rod Stop
107d = Control Rod
109 = Advance Device
110c = Oil Cup
110d = Spring
110g = Bell Crank Levers
110h = Fly Weights
110k = Adjusting Nut
110l = Eccentric
110p = Control Lever
110r = Floating Lever
110y = Coupling Pin
110z = Accessory Plug

FIG. 63.—Bosch Fuel Pump with Governor.

the weights remain in this position, since the latter springs are stiff enough not to be further compressed by the centrifugal force. Thus, the governor remains out of action and the engine speed is controlled only by the accelerator pedal.

Should the pedal be depressed too far, however, so that the engine gets more fuel than it needs for the load, its speed will tend to exceed the predetermined limit so that the centrifugal force of the weights is increased sufficiently to overcome the stronger springs. The weights then move farther out and the procedure previously

described is repeated so that the control rod is moved towards "Stop" and the engine speed held to the predetermined maximum.

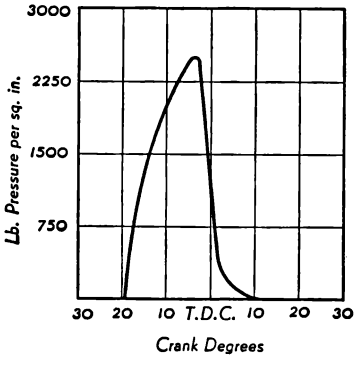

FIG. 64.—Fuel Delivery—Pressure Curve, Bosch Pump.

When the engine rotates at a speed below the idling limit (e.g., by electric starter), the centrifugal force generated by the governor weights is insufficient to swing them out enough to compress the idling springs. Consequently the weights will rotate close to the shaft and will impart, through the medium of the bell crank 110*g*, a clockwise rotary movement to the floating lever 110*r* about the eccentric 110*l*. This would mean that the control rod would move away from "Stop" and so provide more fuel than could be usefully consumed unless prevented; therefore a control rod stop 101*m* is provided which prevents this occurrence.

Smoke Limit Control. In addition to the control rod stop 101*m* (Fig. 63), a control lever stop 110*ma* (Fig. 66) is also provided on the quadrant situated at the side of the governor. This limits the travel of the control lever 110*p* and hence the throw of the eccentric 110*l*; otherwise the accelerator pedal could be depressed so much as to overcome the maximum speed spring and nullify the action of the governor. If reference is made to Fig. 63, it will be seen that the floating lever 110*r* is connected to the control rod 107*d* by means of adjustable links.

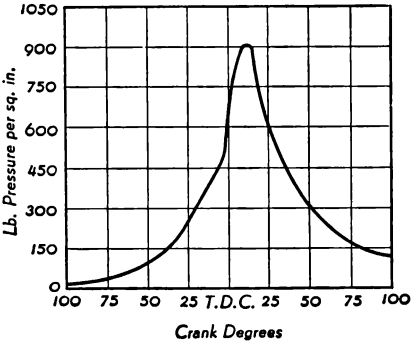

FIG. 65.—Performance Curve with Bosch Pump.

TIMKEN FUEL INJECTION PUMPS.

Timken fuel injection pumps conform to standard American practice. They are made in two standard sizes, one with a plunger

diameter of from 4 mm. to 9 mm.; the other with a plunger diameter range of from 5 mm. to 11 mm. Both units are made for engines of from one to eight cylinders.

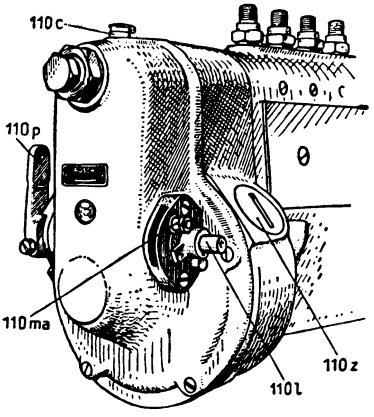

FIG. 66.—Control Lever Stop.

The small size, or model "A," using the 4 mm. to 9 mm. plunger range is designed for use on Diesel engines up to approximately 150 horsepower, and operating at speeds up to 4,000 revolutions per minute. It is a type of pump especially adaptable to automotive engines.

The larger or model "B," with the 5 mm. to 11 mm. plunger range is for use on engines of from 110 to 250 horsepower at speeds up to 3,000 revolutions per minute. This, then, is a pump intended mainly for large automotive engines, aircraft engines, and the medium size stationary and marine engines. The Timken pump is illustrated in Fig. 67.

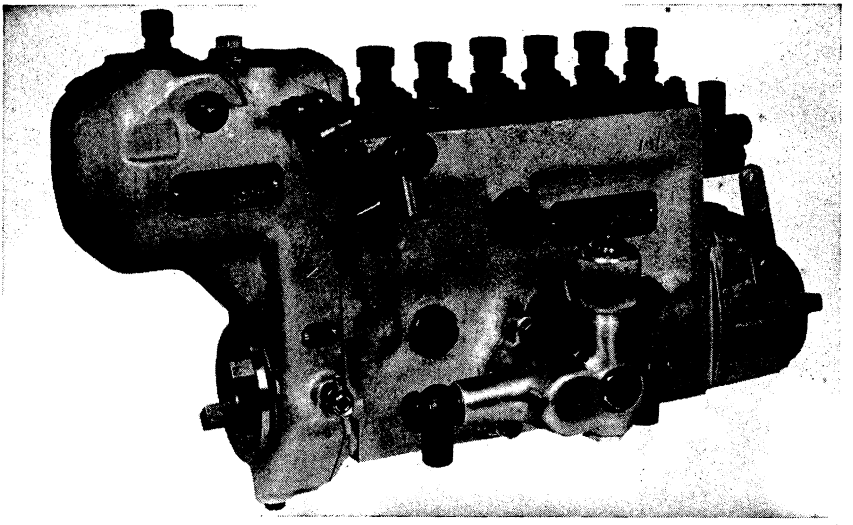

(Courtesy of Timken Roller Bearing Company)

FIG. 67.—Timken Injection Fuel Pump with Governor and Timer.

Fuel is delivered to the pump by means of a special pump in the feed line, which is connected to the fuel tank. A full charge of oil enters the cylinder when the plunger is in the lowest position. Delivery of fuel to the engine starts as soon as the piston covers the inlet port. It ends when the upper helical edge of the annular groove in the piston opens the overflow or by-pass port on the oppo-

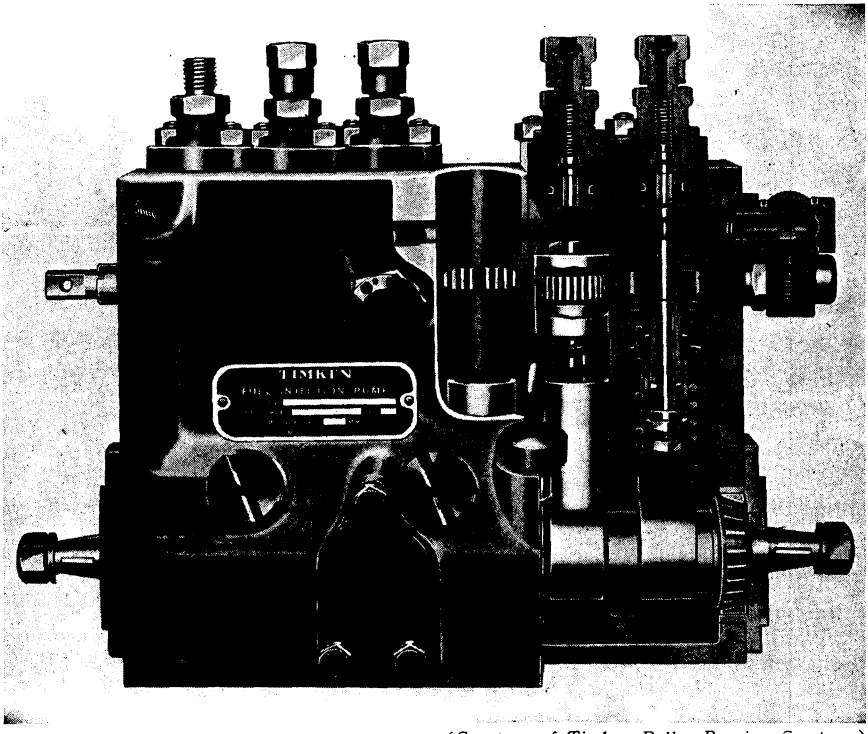

(Courtesy of Timken Roller Bearing Company)

FIG. 68.—Cutaway and Phantom View of the Timken Fuel Injection Pump with Renewable Units.

site side of the pump cylinder wall, releasing the pressure in the discharge line. The effective delivery stroke of the piston or throttle position may be varied by turning the piston in its cylinder to change the point of the delivery stroke at which the overflow port is uncovered.

The pistons may be adjusted, to vary the amount of fuel deliv-

ered, by means of a simple and positive method. A rack rod extends horizontally along the rear face of the pump, meshing with cut gears on the upper members of the pairs of piston control sleeves. The upper or driving sleeve for each piston may be rotated on its barrel. This upper sleeve is tongue and slot connected with the lower sleeve, which fits on the piston. As the upper sleeve is rotated on the barrel, the lower sleeve rotates the piston, which changes the position of the helix with respect to the relief port.

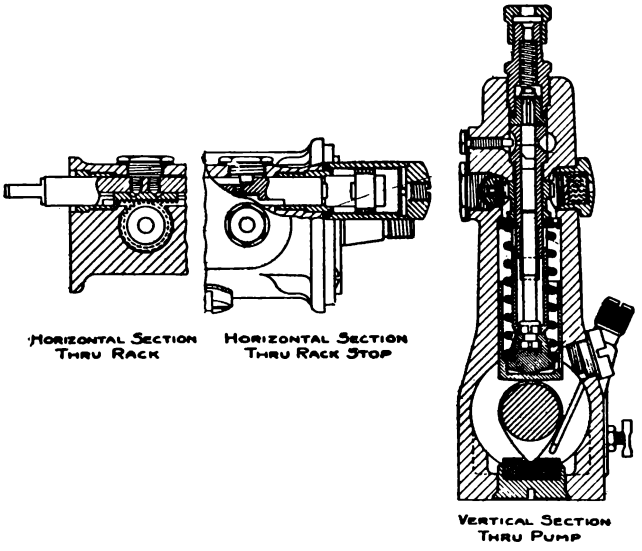

FIG. 69.—Cross-section of Timken Pump and Rack Mechanism.

Surrounding these sleeves are light helical springs, which serve to retract the pistons. The internal construction of the Timken pump is depicted in Fig. 68.

To further clarify the internal construction of the Timken pump, a cross section of the pump and rack mechanism is shown in Fig. 69.

Timken fuel pumps can be supplied with either mechanical or vacuum governors. The function of the governor is to maintain a constant predetermined engine speed, regardless of the load applied, unless the load is beyond the capacity of the engine. The mechanical governor consists essentially of flyballs or steel weights, hinged to a spider, which are mounted on and driven by the governor shaft. As the assembly rotates, the weights open up due to centrifugal

force. A sleeve fits around the governor shaft and by means of a shoulder engages fingers on the governor weights. The opposite end of the sleeve engages a bearing pivoted in the governor housing. The opposite end of the sleeve engages a bearing pivoted in the governor yoke. The lower end of the yoke is hinged in the back of the governor housing. The upper end is connected to a spring, which in turn is connected to the governor control shaft. A second arm on the yoke is attached to the fuel injection pump control rod.

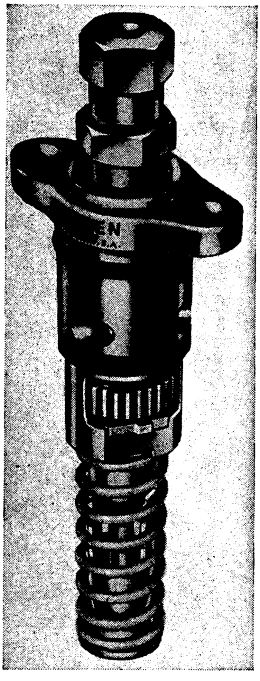

(*Courtesy of Timken Roller Bearing Company*)

FIG. 70.—Timken Fuel Pump Renewable Unit.

When the weights are closed, the fuel injection control rod is in a position to permit the maximum effective stroke of the plunger to deliver the full amount of fuel to the engine. As the load of the engine varies, the weights open or close regulating the position of the control rod so that the amount of fuel delivered to the engine is just sufficient to hold the speed constant.

Manual control of the governor is accomplished by means of a lever mounted on the outside of the governor case and connected to the engine throttle. The governor assembly is shown in Fig. 70.

The mechanical governors are available in either "automotive" or "industrial" types.

The function of an "automotive" type governor is to hold any engine at correct and uniform idling speed, when not under control of the operator, to allow the operator perfect control over his engine at all normal operating speeds and to prevent the engine from overrunning a pre-determined limit.

The function of the "industrial" type governor is to maintain any constant engine speed selected by the operator, regardless of the load applied, unless the load is beyond the capacity of the engine.

Vacuum governors are adaptable for either automotive or in-

dustrial engine requirements. They operate on the principle of balanced pressures. Outside atmospheric pressure, admitted to one side of a flexible diaphragm, is balanced at all times by the existing intake manifold pressure of the engine plus the force of a governor spring pushing against the intake side of the governor diaphragm. The diaphragm is connected to the rack rod of the injection pump. With every change of the intake manifold pressure, the diaphragm must seek a new position of balance, thus resulting in a change of control rack rod position and thus a change in the amount of fuel being injected by the injection pump. The intake manifold pressure is controlled by the speed of the engine and by the restriction offered to the entering air by the variable intake venturi valve. If the engine should drop its load suddenly at any given venturi valve position, it will, in suddenly picking up speed, cause a drop in intake manifold pressure. The governor spring will thus lose some of its support in balancing the diaphragm against the outside pressure and will, therefore, allow the diaphragm to recede slightly, shutting off the fuel being injected into the engine to some extent and thus holding it to the desired regulated speed. Conversely, it would cause more fuel to be injected should a load be suddenly applied to the engine resulting in a momentary slowing down of the engine and an increased manifold pressure.

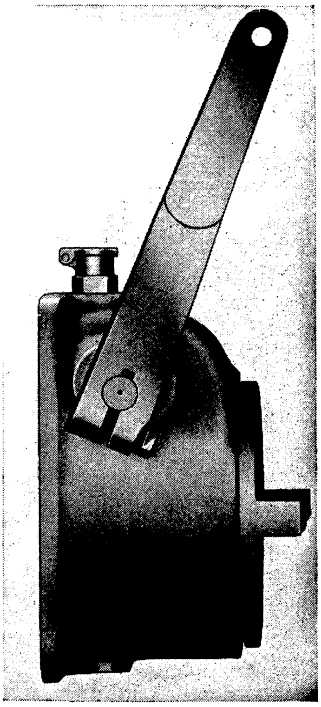

(Courtesy of Timken Roller Bearing Company)

FIG. 71.—The Timken Manual Timing Device.

The operator's control of the engine, through the governor, is provided by means of his control over the variable venturi valve only. By varying the venturi restriction, the intake manifold pressure is varied and thereby the amount of fuel injected by the pump,

which, of course, determines the speed and power at which the engine is to operate. The operator's only direct control over the governor is to shut off the injection pump by means of a separate shut-off lever on the governor.

Timken fuel injection pumps may be supplied with timing devices of two types, manual or automatic. The former permits manual control by means of a variable connection between the pump driving shaft from the engine and the driven shaft from the fuel pump

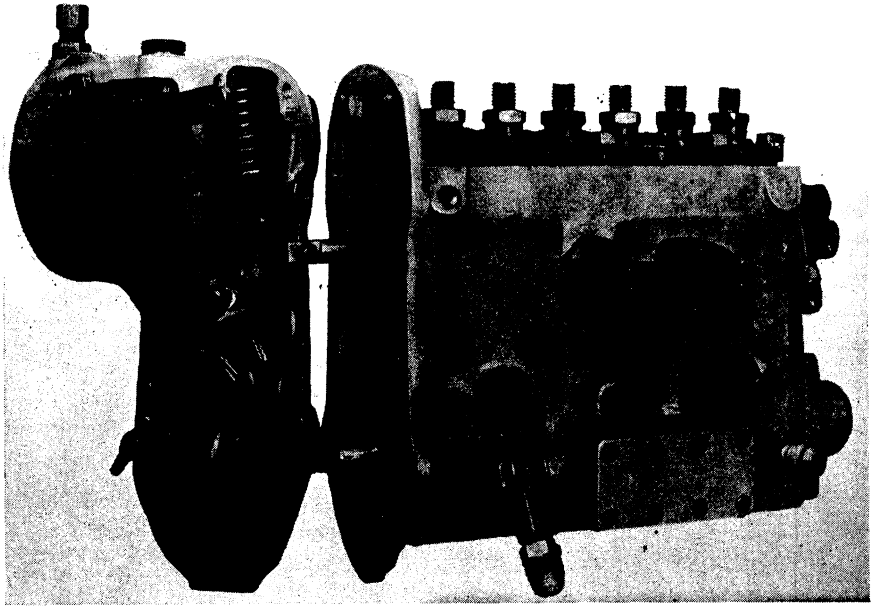

(Courtesy of Timken Roller Bearing Company)

FIG. 72.—Timken Fuel Injection Pump Showing Governor Drive.

proper. A 15° change in injection pump timing in relation to the engine cycle is possible by moving the external control lever on the timing device. This control lever may be operated by the operator or it may be connected to the governor control lever to form a semi-automatic timing control of the injection pump. The manual timing device is shown in Fig. 71.

Timken pumps feature "renewable pumping units." This is an outgrowth of a desire to simplify the servicing of injection equip-

ment. It represents the latest development in American injection pump design and is illustrated in Fig. 70.

INDIVIDUAL FUEL PUMP CONSTRUCTION

Having reviewed the more prominent standard fuel pumps produced by accessory manufacturers, we may now turn to fuel pumps as produced by individual manufacturers who prefer to build their

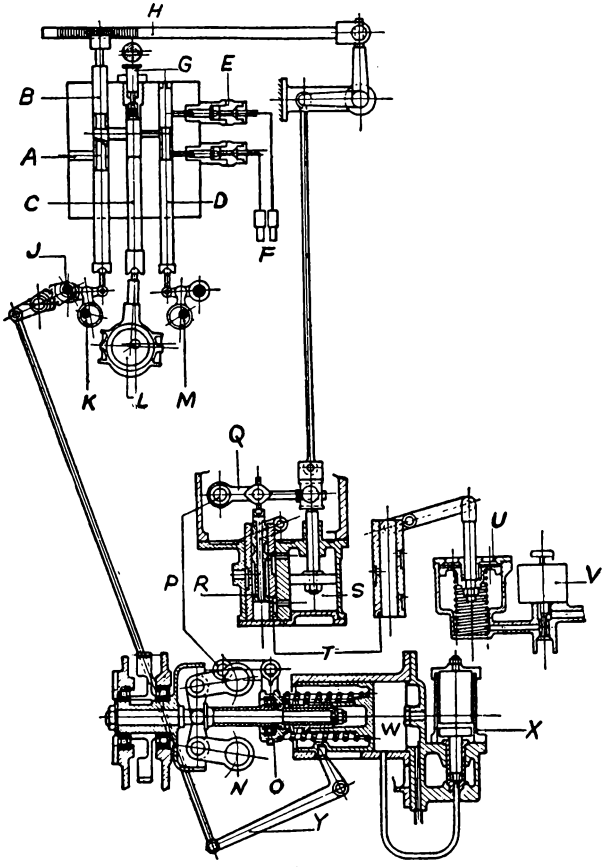

FIG. 73.—Beardmore Fuel Pump.

A, Fuel pump suction; *B*, Control valve; *C*, Main plunger; *D*, Distributing valve; *E*, Delivery valve; *F*, Atomizer; *G*, Vent valve; *H*, Control rack; *J*, Eccentric shaft advancing or retarding control valve; *K*, Eccentric driving control valve; *L*, Eccentric driving main plunger; *M*, Eccentric driving switch valve; *N*, Governor weights; *O*, Governor sleeve; *P*, Governor sleeve lever connection to "*Q*"; *Q*, Floating lever; *R*, Pilot valve; *S*, Power cylinder controlling rack position; *T*, Pilot valve sleeve; *U*, Distant control cylinder; *V*, Solenoid controlling "*U*"; *W*, Speed change cylinder; *X*, Solenoids controlling speed change piston position; *Y*, Control for advance and retard gear.

own pumps rather than use the commercial types placed upon the market by specialty firms.

The efforts of various Diesel engine builders in this field will in the following be reviewed in detail.

Beardmore Fuel Pump. The Beardmore fuel pump shown in Fig. 73 is driven directly by the crankshaft. The pump plungers are operated by eccentrics rather than by cams. Each plunger supplies fuel to 2 cylinders, which is accomplished by a reversible piston plunger *D*. The amount of fuel fed is regulated by the rotation and axial motion of the control valve *B*.

Benes Fuel Pump. The Benes Fuel pump shown in Fig. 74 consists of a plain cylindrical plunger *O* working within the stationary sleeves, *N* and *P*, which are surrounded by another sleeve, *K*, that may be rotated and thereby rotate the plunger to

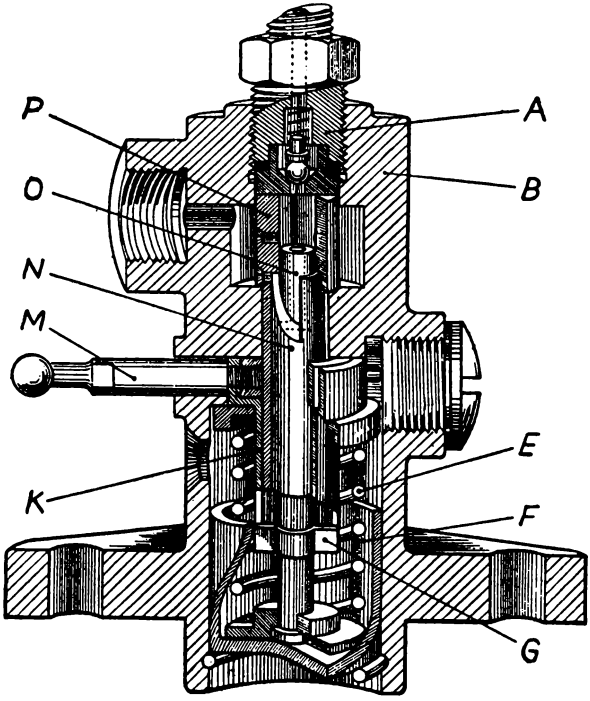

FIG. 74.—Benes Fuel Pump.

control the fuel flow. This control is accomplished by means of a helical groove in the top of sleeve *N* and holes drilled in the plunger *O*. One hole is drilled axially to meet a second radial hole. Oil enters the cylinder from the left as the plunger moves down. Injection begins when the upper suction hole has been covered by the plunger and ends when the radial hole in the plunger comes to the helical groove in sleeve *N*, when the oil pressure is relieved through the plunger holes, the helical groove and the lower hold in sleeve *P*. Rotation of the plunger either increases or decreases the duration of the injection period.

Caterpillar Fuel Pump. The industrial and tractor Diesel engines manufactured by the Caterpillar Tractor Company use the fuel pump shown in Fig. 75.

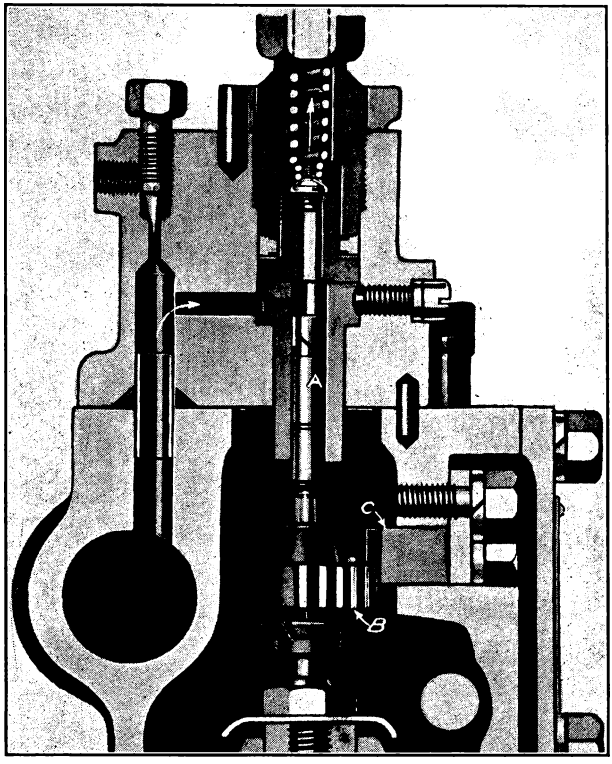

FIG. 75.—Section of Caterpillar Fuel Pump.

These pumps are built in units for from four to eight cylinders each. The fuel oil enters at the left side and is discharged past a check valve at the top. The volume of fuel discharged is controlled by rotation of the plunger *A* by gear *B*, which is operated by either the governor or a manual control through the rack *C*. The top of

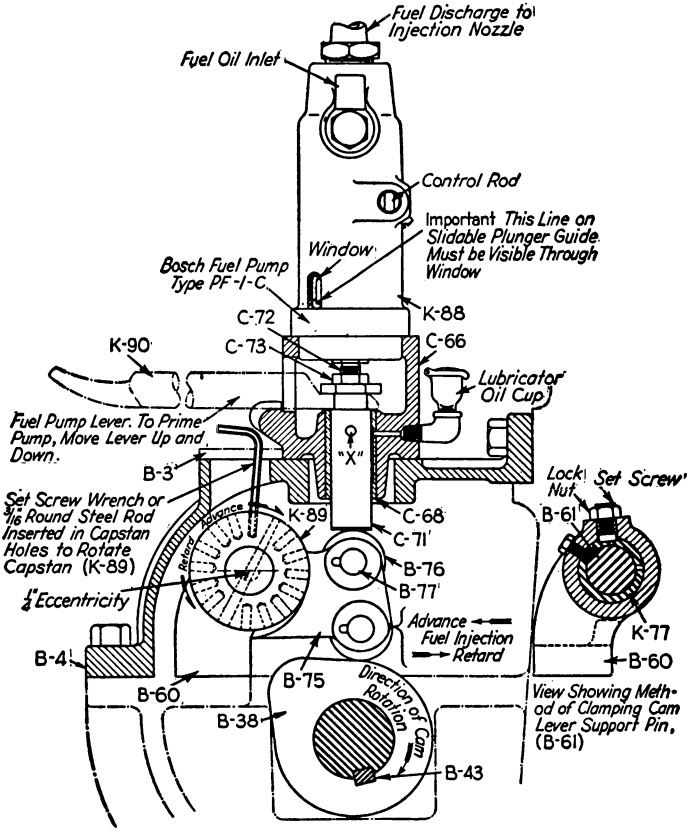

FIG. 76.—Chicago Pneumatic Fuel Pump Adjustment, Type RHB-50.

the plunger *A* is so shaped that the time of the start of injection is fixed while the point of cutoff is varied by the cutoff helix of the plunger.

Chicago Pneumatic Fuel Pump Control. Although the Chicago Pneumatic Tool Company uses individual Bosch injection pumps and multi-hole nozzles on their Diesel engines, they employ

a special drive for these pumps as shown in Fig. 76, which is used on their RHB-50 engines. The pumps are operated from the main camshaft through adjustable rockers. These rockers are mounted on individual eccentric shafts by means of which the beginning of

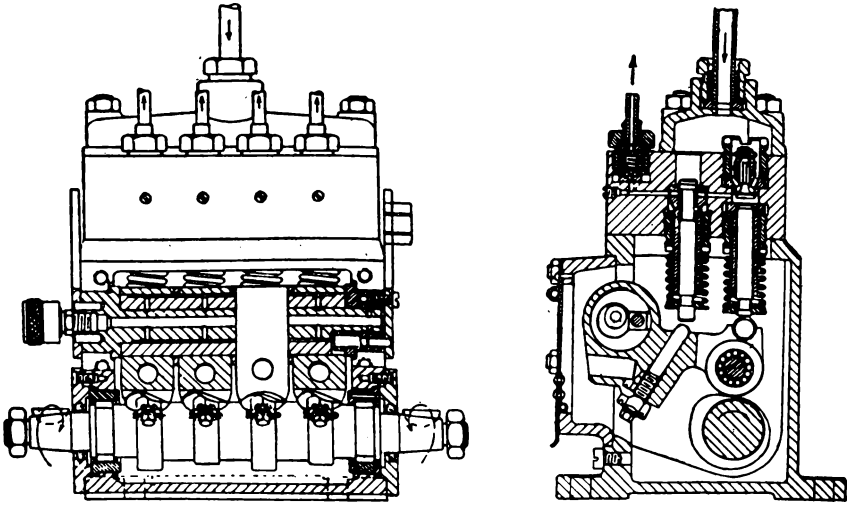

FIG. 77.—Deckel-Compur Fuel Pump.

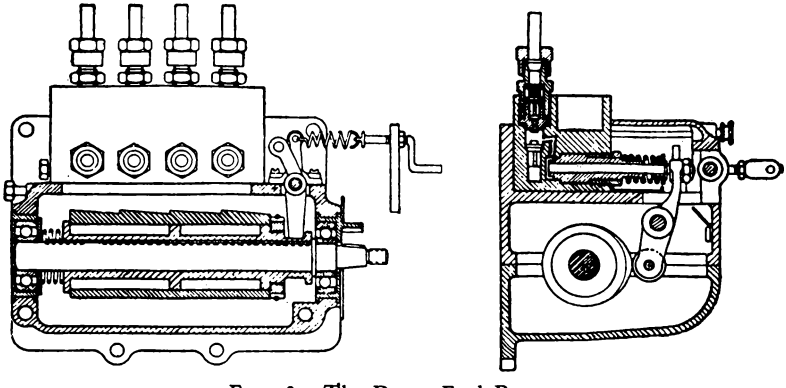

FIG. 78.—The Deutz Fuel Pump.

injection may be advanced or retarded. This permits better balancing of the operation of all cylinders by individual adjustment.

Deckel-Compur Fuel Pump. F. Deckel of Munich manufactures a fuel pump known as the Compur, Fig. 77.

A rocker arm is employed between the cam and the plunger. This rocker operates both the plunger and the by-pass or spill valve, which controls the end of injection. The rocker is mounted on a double eccentric. The small inner eccentric may be adjusted by hand to shift the rocker to the right or left and thus retard or advance the time of injection, while the large outer eccentric is operated by the governor or by hand and raises or lowers the pivot of the rocker to control the operation of the by-pass valve in relation to the travel of the plunger, and thus the amount of oil injected.

Deutz Fuel Pump. Whereas a by-pass valve or port is generally used to vary the amount of fuel injected, the Deutz pump employs a variable pumping stroke, Fig. 78. This variation is obtained by means of tapered cams which are shifted axially on the cam shaft. Check valves control the entrance and exit of oil in the plunger chambers.

The performance of the Deutz fuel pump is shown in Fig. 79, which shows the injection quantities of fuel delivered before and after top-dead-center.

As will be noted, Fig. 79, the quantity of fuel rises steadily at

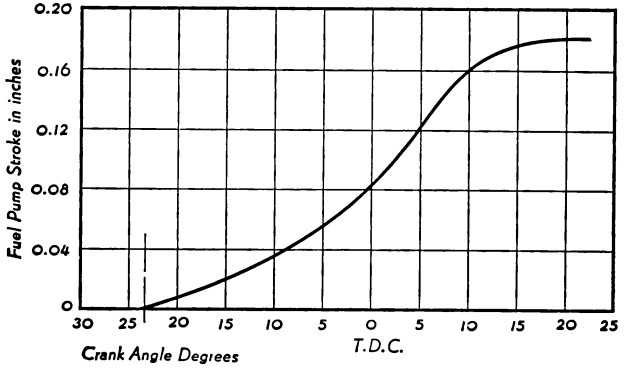

FIG. 79.—Injection Quantity of Fuel, Deutz Pump.

from 0.04 to 0.16 inch stroke and then falls off. The slope of this curve gives a relative measure of the rate of fuel injection from the beginning to the end of the period. Fig. 80 will show the total quantities of fuel delivered at speeds ranging from 500 to 2,000

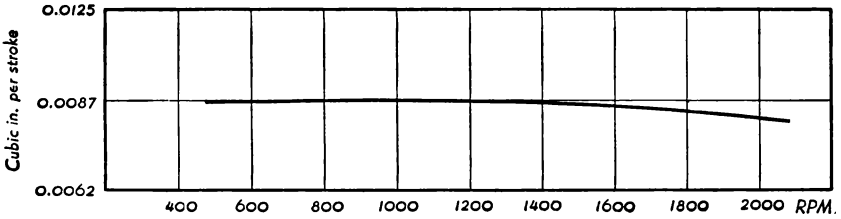

FIG. 80.—Total Quantity of Fuel Delivery, Deutz Pump.

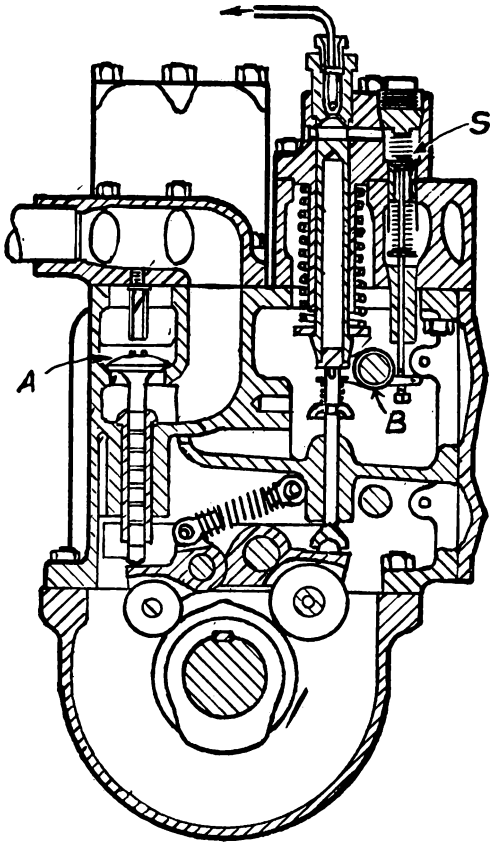

FIG. 81.—Large Fairbanks-Morse Fuel Pump.

r.p.m. It will be noted that the fuel delivery is practically constant over this range of speed.

In addition to the variable-stroke fuel pump, the Deutz Company also builds a constant stroke pump with variable by-pass for excess oil.

Fairbanks-Morse Fuel Pump. The Fairbanks-Morse fuel pump (for large two-cycle engines) is shown in Fig. 81. The pump operation is controlled by the governor through the variable-closing

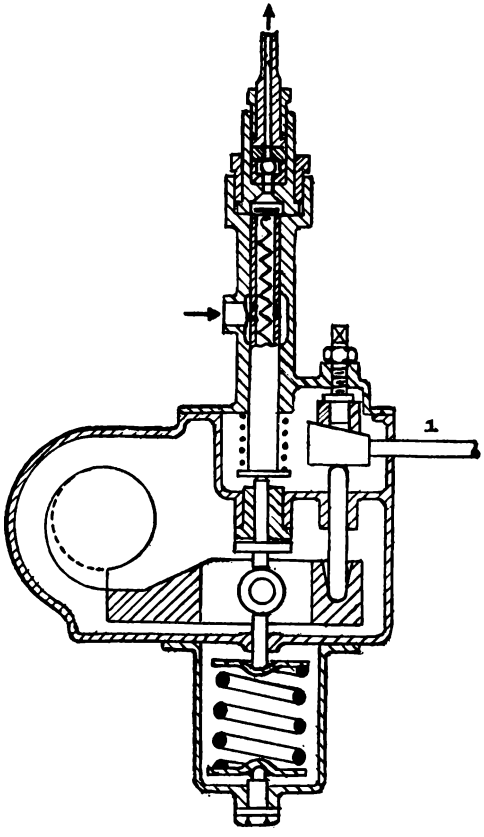

FIG. 82.—Ganz-Jendrassik Fuel Pump.

suction valve *S*. The phase relation of the suction valve and the plunger is varied by the governor through the eccentric *B* on which the valve rocker arm oscillates. Valve *A* is the air starting valve.

On their small two-cycle engines, a variable-stroke plunger regulates the fuel.

Ganz-Jendrassik Fuel Pump. The Ganz-Jendrassik fuel pump, shown in Fig. 82, delivers fuel at practically constant pressure. The pressure is, however, but approximately 2000 lb. per sq. in. The quantity of fuel delivery is controlled by the wedge 1, which varies

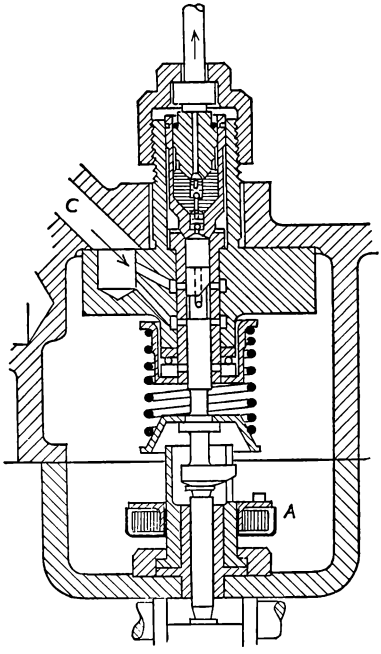

FIG. 83.—Junkers Fuel Pump and Governor.

the length of the plunger stroke. The injection is obtained by spring force.

Fuel oil enters on the left side of the hollow plunger, passes through holes to the inside of the plunger and up past the suction valve on top of the plunger. The oil is discharged to the nozzle past the ball check valve at the top.

Junkers Fuel Pump. Fig. 83 shows the pump used on the Junkers two-stroke Diesel engine. Injection begins when the lower

port is closed by the plunger and ends when the upper port begins to register with the slot in the plunger, the fuel moved during the

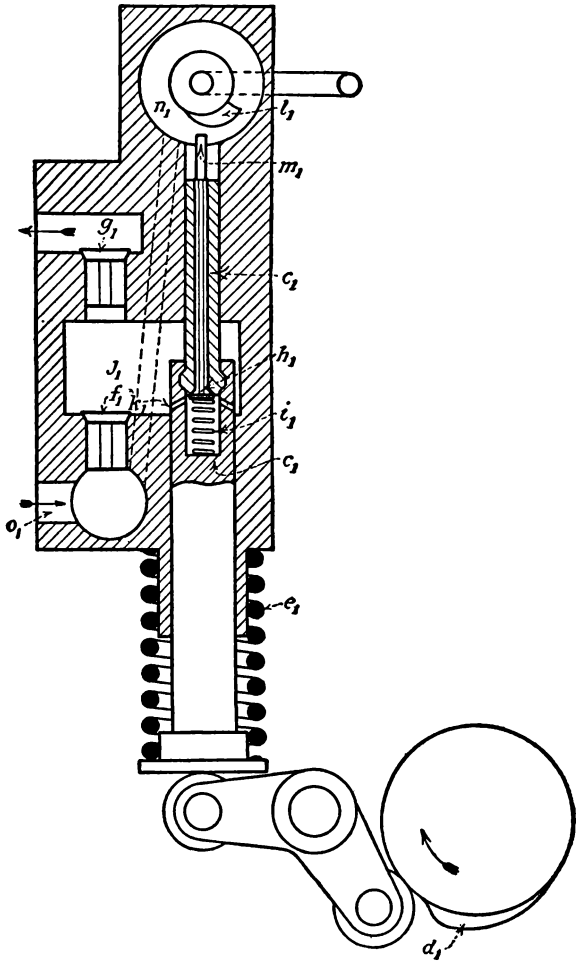

FIG. 84.—Koerting Fuel Pump.

rest of the upward stroke being by-passed back to the float chamber through *C*. Fuel is delivered through check valves to open nozzles located on the sides of the engine cylinder.

The points of the cycle at which injection begins and ends are controlled by the shape of the edges of the slot, and the angular

position of the plunger in the barrel which is changed through the gear *A*.

Koerting Fuel Pump. The Koerting fuel pump plunger is of two-piece construction as shown in Fig. 84. By making the plunger in two parts, the lower part can be made sufficiently large to withstand side pressures, and the upper part may be made of such size

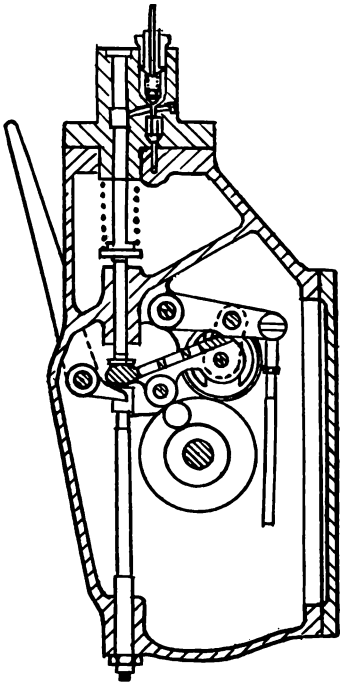

FIG. 85.—McLaren-Benz Fuel Pump.

as is required, so that the difference in the areas of the plungers multiplied by the stroke is at least equal to the maximum volume of fuel required per stroke. The larger the upper plunger, the smaller the quantity of oil pumped.

The lower camshaft operates the pump plungers while the upper camshaft is oscillated by hand, or by a governor, and opens the valve h_1, thus by-passing the oil up past the valve stem and ending injection.

McLaren-Benz Fuel Pump. The McLaren-Benz fuel pump illustrated in Fig. 85 is of the single-acting plunger type.

This pump has automatic suction and pressure valves, the latter being spring-loaded. The maximum stroke can be regulated by

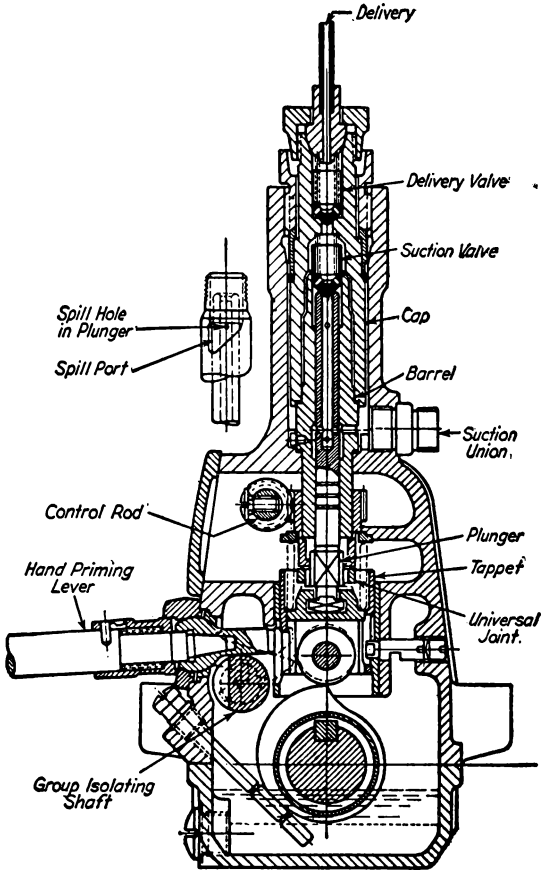

FIG. 86.—M. L. Fuel Pump.

means of adjusting screws, and an outside lever is provided so that the pump may be operated by hand. The quantity of oil to be injected is determined by the position of the rocker fulcrum, which may be raised or lowered in the vertically slotted support either by a governor or by hand.

M. L. Fuel Pump. The M. L. fuel pump, illustrated in Fig. 86, has its suction passage near the bottom of the hollow plunger. The

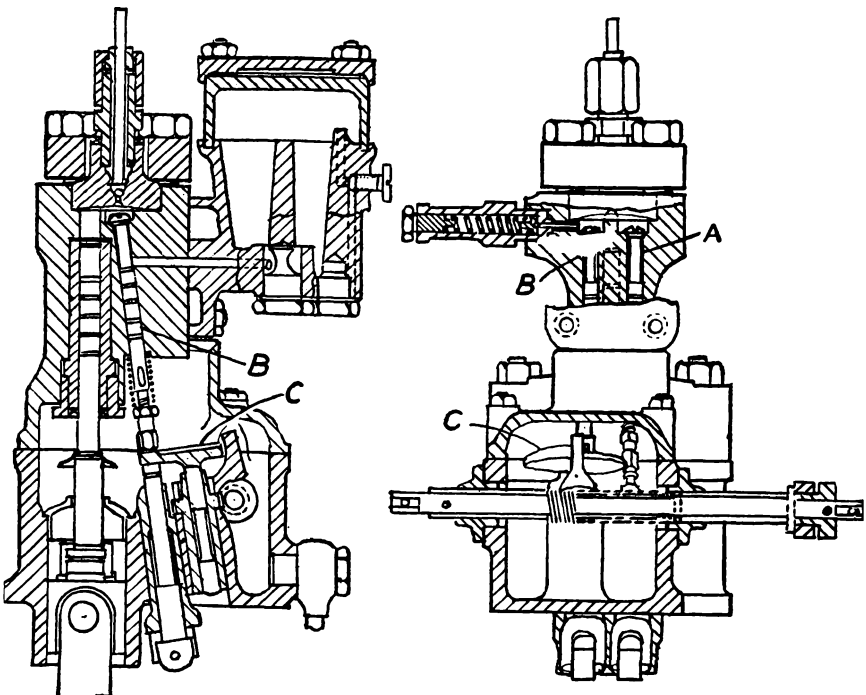

FIG. 87.—Ricardo Fuel Pump.

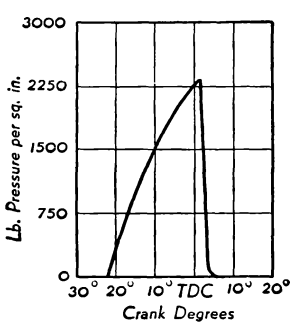

FIG. 88.—Performance of Ricardo Fuel Pump.

fuel entering passes up through the plunger, past the suction valve which rides on the end of the plunger. Injection begins with the upward motion of the plunger and ends when a radial hole in the

upper part of the plunger comes to the diagonal edge of the spill port in the pump barrel. Rotation of the plunger in relation to this spill port furnishes the control of injection.

RICARDO Fuel Pump. Ricardo is the designer of the fuel pump shown in Fig. 87. The pump discharge is controlled by a by-pass valve *B*, which is governed through an oscillating wedge *C*. The suction valve is shown at *A*. The by-pass and suction valves are

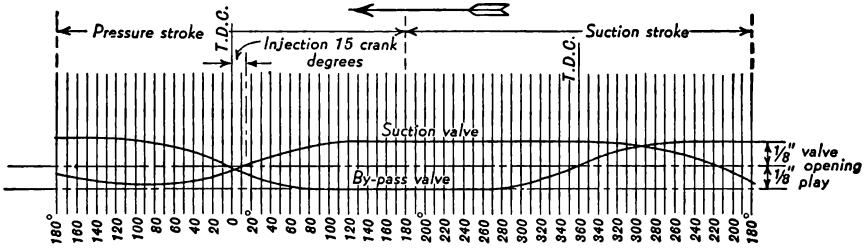

FIG. 89.—Operation Details of Ricardo Pump.

positively operated from the engine camshaft, as is also the pump plunger. The performance of the pump is shown in Figs. 88 and 89; injection begins at about 22 degrees ahead of T.D.C., reaches maximum pressure at about 2 degrees past T.D.C., and ends at about 5 degrees past T.D.C.

Chapter 7

FUEL INJECTION NOZZLES

The fuel nozzles used in Diesel engines may be classified as follows:

Single-hole nozzles,
Multi-hole nozzles,
Pintle nozzles,
Open nozzles.

The *single-hole nozzle* offers the least resistance to the fuel stream, but requires the greatest injection pressure in order to atomize the fuel; however, it imparts the greatest penetrating power to the fuel stream.

The *multi-hole nozzle* offers resistance to the fuel stream; it breaks up the fuel particles more finely, and it can be used with less pressure than the single-hole nozzle, but it ejects a fuel stream lacking in penetrating power.

The *pintle nozzle* is essentially a single-hole nozzle with a comparatively large orifice. The pintle, a little projection on the needle valve, is cone shaped, and projects through the nozzle opening with a slight annular clearance. Pintles improve atomization, but the annular jet formed by this nozzle has far less penetrating power than a single-hole nozzle of the same area. But because this type of nozzle is practically non-plugging, it has come into almost universal use in small high-speed engines.

The *open nozzle* is generally a single-hole nozzle that is always open and allows the fuel to pass directly to the combustion chamber. It has been used with good results on both Diesel and spark-ignition engines.

CHOOSING NOZZLES

For open-chamber engines, where the fuel is injected directly into the clearance space between the cylinder head and piston, a multi-hole nozzle is most generally used. It is placed over the center of the piston. A single-hole nozzle is sometimes used and located in the side of the cylinder. Its penetrating power will reach across the combustion chamber, and with sufficiently high injection pressure fuel droplets of the order of 5μ are possible. For engines of a bore of over 4 inches, two nozzles or even four are sometimes used, injecting into the combustion chamber from opposite sides, but so arranged that the fuel streams do not collide with one another.

In engines employing some type of auxiliary combustion chamber, the pintle nozzle is most generally used, but sometimes the single-hole nozzle is used. It is not primarily essential in this type of engine to get either great penetration or an exceedingly fine spray.

An interesting test was made by Chief Engineer H. Hintz with a vertically mounted (between the valves) multi-hole nozzle, injecting 4 horizontal streams of fuel directly into the open-type combustion chamber of a Krupp Diesel engine. Fig. 90.

It is of note that each of the 4 streams covers almost exactly a 90° arc, one quarter of the combustion space.

The dark spots are the fuel streams as injected by this type of nozzle. The white spots are ZnO_3 which had been formed during the combustion.*

Open versus Closed Nozzles. The subject of the open and closed types of nozzles received much attention among Diesel engineers. The one important advantage of the former type is its freedom from clogging, so prevalent with the more complicated types of closed nozzles. However, adequate filtering of the fuel should prevent choking of the nozzle by small solid particles.

* The white spots in the photograph puzzled the investigators until it was established that these were zinc oxide. The fuel-oil used in these tests had been stored for some time in galvanized iron drums. Small particles of the zinc used for the galvanization mixed with the oil. The oil and zinc particles injected into the cylinder formed zinc-oxide during the combustion.

The one drawback of the open nozzle is its tendency to "dribble," a condition which is practically non-existent with closed nozzles,

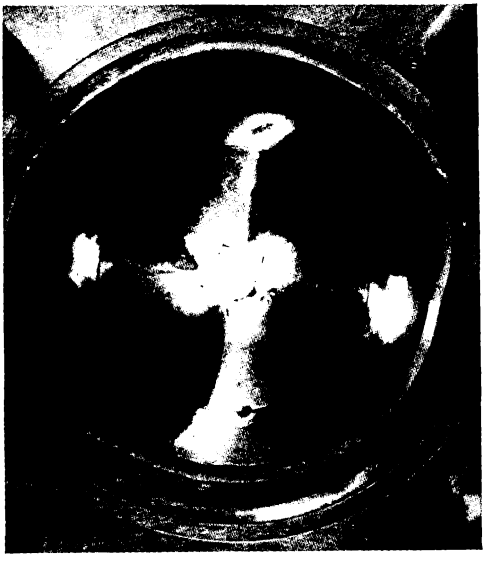

FIG. 90.—Multi-hole Nozzle Test.

except with a leaky valve. The action of open and closed nozzles has been compared by Wild,* as shown graphically in Fig. 91.

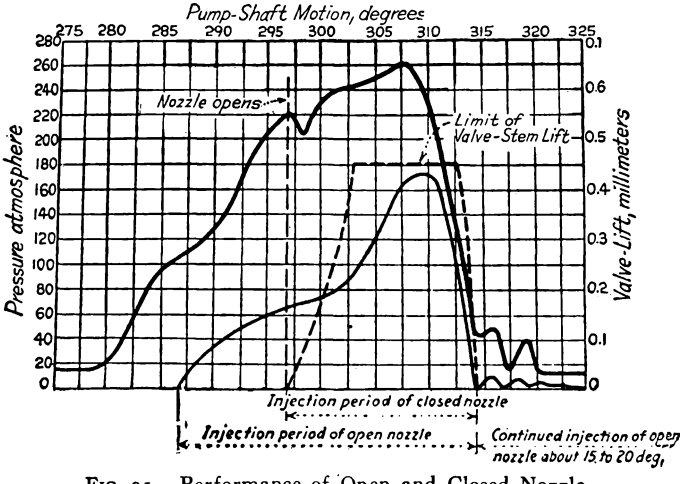

FIG. 91.—Performance of Open and Closed Nozzle.

* J. E. Wild, United American Bosch Corporation.

To simplify the tests, fuel was injected into atmospheric pressure rather than into such pressures as exist within a combustion chamber. The open nozzle used was not of the single-hole type but of the multi-hole variety of 5 orifices, each of 0.018 inches diameter. The fuel lines used during the tests were of 0.100 inches inside diameter and 39 inches long. The pump was operated at a speed of 600 r.p.m., withdrawing 75 cc. (0.0046 cubic inch) of fuel from the line when the by-pass opened; thus the pressure of the line immediately fell to zero. But in spite of this, the open nozzle continued to inject fuel for a period of from 15 to 20 degrees on account of the oscillations set up by the fuel in the line. The closed nozzle, however—operating under identical conditions—opened at a pressure of 3300 lb. per sq. in. and closed instantly when the pressure was reduced to less than 2940 lb. per sq. in. Immediately after the by-pass of the pump opened, the pressure of the fuel line fell to 588 lb. per sq. in. by the time the fuel valve closed. The oscillations still occurring in the fuel line were not of sufficient magnitude to open the nozzle; hence no dribbling took place.

One interesting point was brought out, namely, that the pressure with an open nozzle begins about 6 to 10 degrees later than with a closed nozzle, this being due to the fact that the pump must first replenish the loss due to surges within the fuel line before pressure can be built up.

Bosch Nozzles. The Bosch nozzles are of the single-, pintle-, or multi-hole type, as illustrated in Fig. 92. They are the nozzles most widely used on Diesel engines today.

The orifice sizes are varied depending upon the engine requirements. The single-hole may have various length-diameter ratios. The pintle may be cylindrical as shown or may be conical with the largest diameter at the bottom, thus offering a possible variation of the shape of the spray cone. The multi-hole nozzles may have any number of holes at various angles.

The nozzle is held closed by a spring which is adjusted to the desired injection pressure. The oil enters through 111*a* and passes down to an annular space just above the conical valve seat. The valve is opened when the oil pressure against the annular area,

between the valve seat and the valve guide, becomes greater than the spring force. Any leakage of oil past the valve guide is returned to the supply through 111 *d*. The nozzle body 113*a* and the nozzle

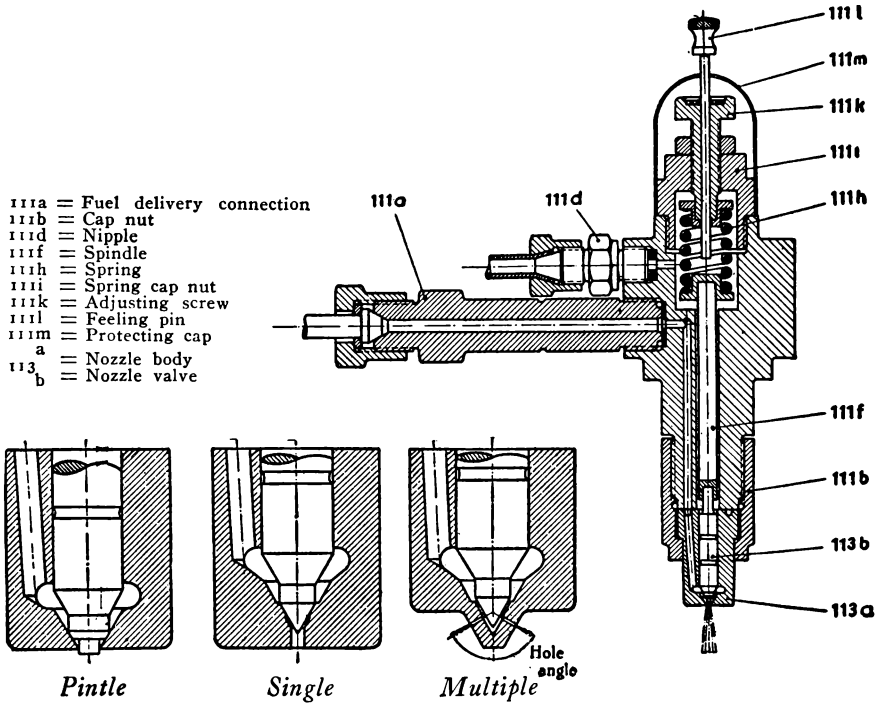

FIG. 92.—Bosch Nozzle.

valve 113*b* may be varied for different engines, and may be replaced with new units when found to be defective.

Hesselman Open Nozzle. The Hesselman nozzle is illustrated in Fig. 93. This type of valve is used in the Hesselman fuel injection engine with spark ignition and is, therefore, not a Diesel, but its prominence warrants discussion here. It is an open-type nozzle with three half-ball check valves to cut off the fuel spray sharply when injection ends, and to prevent combustion pressures from backing into the fuel pressure lines. The nozzle tip is made of Nitralloy stainless steel, and has two large spray holes, one pointing to-

wards the whirling current of turbulent air and the other pointing in the opposite direction.

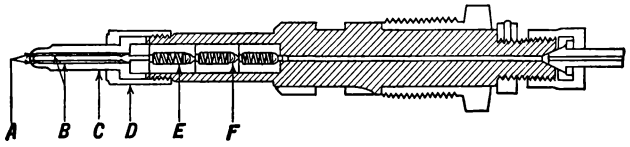

FIG. 93.—Open Type Hesselman Nozzle. *A*—Twin openings in nozzle tip; *B*—Twin grooves in nozzle insert feed fuel to tip openings; *C*—Stainless steel nozzle tip; *D*—Nozzle assembly nut; *E*—Triple spring check valve; *F*—Half ball checks.

Junkers Open Nozzle. A nozzle of extreme simplicity is that of Junkers, used and especially developed for the Junkers opposed-piston 2 cycle aviation engines. Fig. 94 illustrates the design. It is the open type and uses no pins, ball check valves and kindred com-

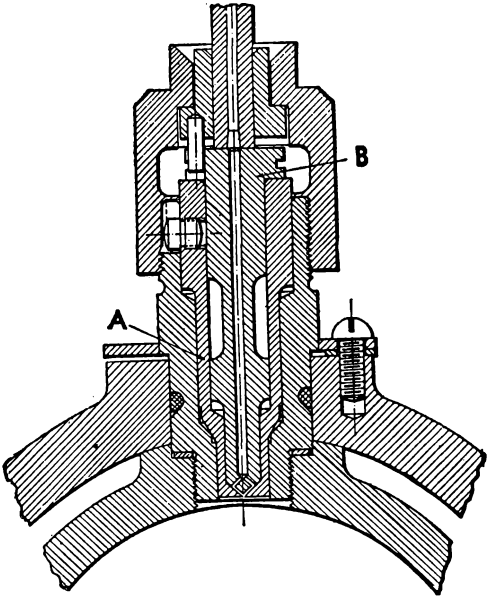

FIG. 94.—Junkers Open Nozzle.

plications. Fuel is injected as and when the pump plungers deliver it. The Junkers nozzle is subject to only the very minimum of dribbling and produces a relatively minute atomization.

The stream of oil is divided into two streams which again meet just before the oil issues from the single hole nozzle. Each stream

approaches the nozzle at a 45 deg. angle to the axis. When these streams impinge on each other, they produce a rather flat, fan-like spray.

M.A.N. Nozzle. The M.A.N. nozzle is a single-hole nozzle of the open-type as shown in Fig. 95.

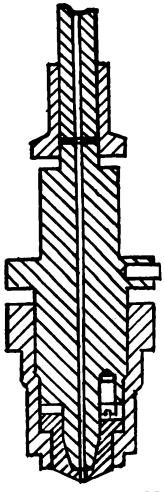

FIG. 95.—M.A.N. Open Nozzle.

As will be noted, this nozzle consists of simply a small uniform passage without restrictions. This type of nozzle represents the acme of simplicity.

In order to prevent excessive dribbling, the feed pipes leading to open-nozzles are usually provided with check valves, consisting of either one or more spring-loaded ball checks.

A typical spring-loaded twin ball check valve is shown in Fig. 96.

McKechnie Nozzle. James McKechnie, the technical director of the (British) firm of Vickers, Ltd., originated solid fuel injection in 1910, for use in place of high air pressures formerly used for the injection of fuel.

The system he originated became known as the "Vickers Com-

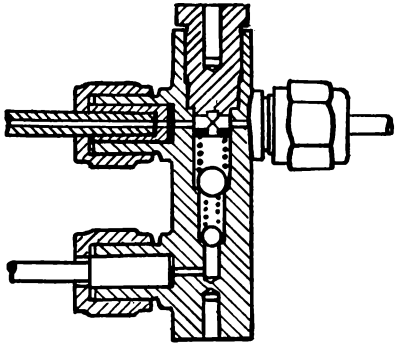

FIG. 96.—Check Valve to Prevent Dribbling.

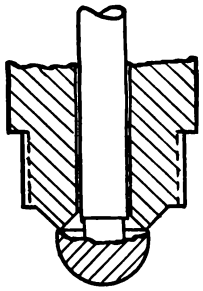

FIG. 97.—McKechnie Nozzle.

mon Rail System," consisting essentially of a pipe line containing fuel under pressure, fed by a pump. While this system has been practically superseded by the now customary multi-plunger pump and

pipe lines, insofar as high speed engines are concerned, credit must be given to McKechnie for originating a mechanical fuel-pumping device.

McKechnie's fuel nozzle is shown in Fig. 97. As will be seen, McKechnie's nozzle consists of a stem terminating in a ¾ sphere; the fuel being forced along the loosely fitting stem leaves at the ball-end in a fine circular spray. This nozzle is radically different from the types in common use today.

M.W.M. Nozzle. The M.W.M. single-hole nozzle is shown in Fig. 98. The M.W.M. is a spring loaded single-hole nozzle, also containing a triangular channel (similar to Junkers) into which the fuel is forced before it can be injected into the combustion chamber.

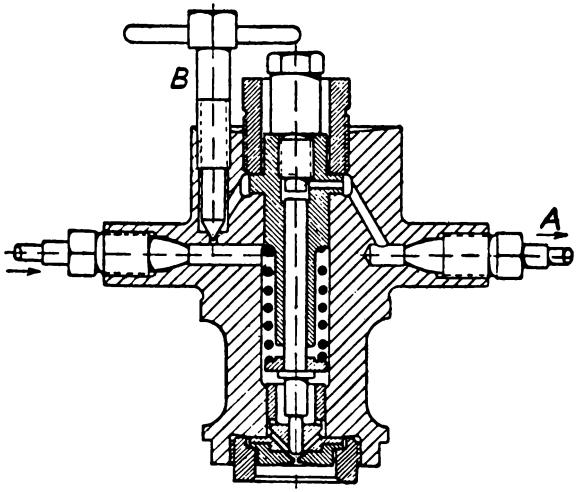

FIG. 98.—M.W.M. Single Hole Nozzle.

The M.W.M. nozzle is provided with a fuel by-pass *A* leading the leakage back to the suction passage. To free the pipe line from any air that may have found its way into the fuel line, the valve *B* may be used.

N.A.C.A. Double Nozzle. With the usual spring-loaded nozzle, variations in the rate of fuel discharge can be had only by varying either the pressure at the pump or by adjusting the spring-load or

perhaps by both. Not much variation can be obtained by these methods.

The N.A.C.A. devised a double nozzle consisting of a pin within a sleeve, each of which acts as an independent valve. This is accomplished by loading the pin and sleeve by separate springs and by providing individual stops for both. The manner in which this is accomplished is shown in Fig. 99.

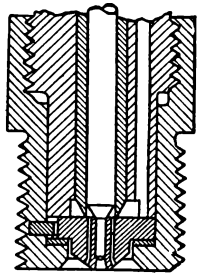

FIG. 99.—N.A.C.A. Double Nozzle.

It is said that aside from an occasional lapping of the valve seats in order to remove erosion marks, no attention need be given to this type of nozzle.

When the sleeve is raised, oil is injected through the multi-hole nozzle, the subsequent raising of the pin allows oil to pass out through the central single-hole orifice.

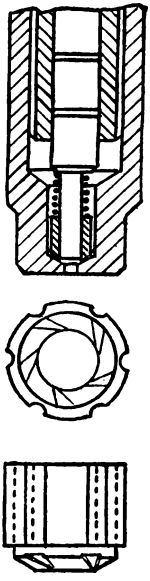

FIG. 100.—R.A.E. Slot-Type Nozzle.

R.A.E. Experimental Nozzle. A novel slot-type of nozzle is that of the R.A.E. shown in Fig. 100. The R.A.E. type as shown is of the 5 slot type. The tangential slots on the conical surface tend to produce a whirling motion of the oil as it is injected. Extensive experiments have shown that a considerable improvement in engine performance was secured with such a nozzle. With an injection pressure of 6,400 lb. per sq. in. and a compression pressure of 800 lb. per sq. in., a brake-mean-effective pressure of 120.6 lb. per sq. in. was obtained at an engine speed of 1,000 r.p.m. with a fuel consumption of 0.401 lb. per b.hp. hr.

Ricardo Open Nozzle. The Ricardo open nozzle is shown in Fig. 101 and consists essentially of a plain single-hole orifice of relatively large diameter. A simple, spring-loaded ball-check valve is placed in the upper part of the nozzle.

The oil injection pressure required with this nozzle may be from 1,500 to 3,000 lb. per sq. in. The Ricardo nozzle thus represents

an intermediate between the usual closed nozzle and the open nozzles of Junkers, M.A.N. and others. The nozzle passage is

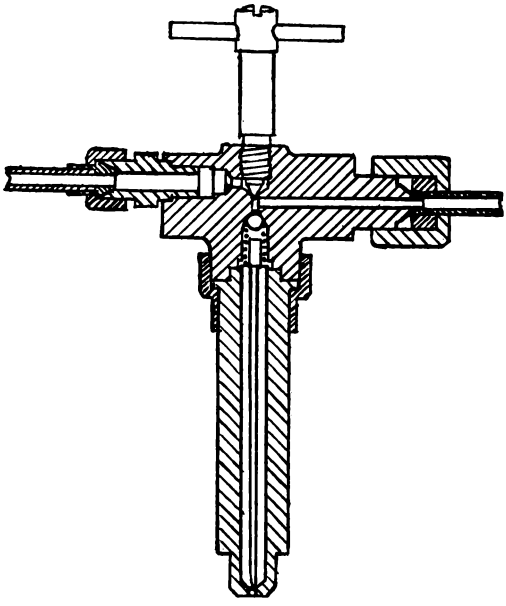

FIG. 101.—Ricardo Open Nozzle.

fitted with a long pin having axial flutes to provide passage for the oil to the nozzle.

Spiral Groove Nozzles. Tests with nozzles featuring a spiral groove (N.A.C.A. tests) have given results shown in Fig. 102.

As will be seen, the penetration increases with an increase in the angle of the spiral grooves, the 90 deg. angle having greater penetration power than the 23 deg. angle. Grooves within a nozzle thus affect oil somewhat as the grooves within a rifle or gun barrel affect the distance reached by a projectile.

Tartrais-Peugeot Nozzle. The Tartrais-Peugeot nozzle is a somewhat complicated design, as shown in Fig. 103. The nozzle pin is a mushroomed and beveled sleeve. In addition to the mushroom head, the nozzle pin also features a beveled point, the need of which is not at all clear, except that it may collect and retain heat.

The entering oil passes two check valves in series, then passes along the fluted valve stem, and is injected in a very flat cone-like spray.

Worthington Nozzle. The Worthington nozzle is another interesting design which operates in a manner opposite from the accepted standard for solid injection nozzles, Fig. 104. This nozzle,

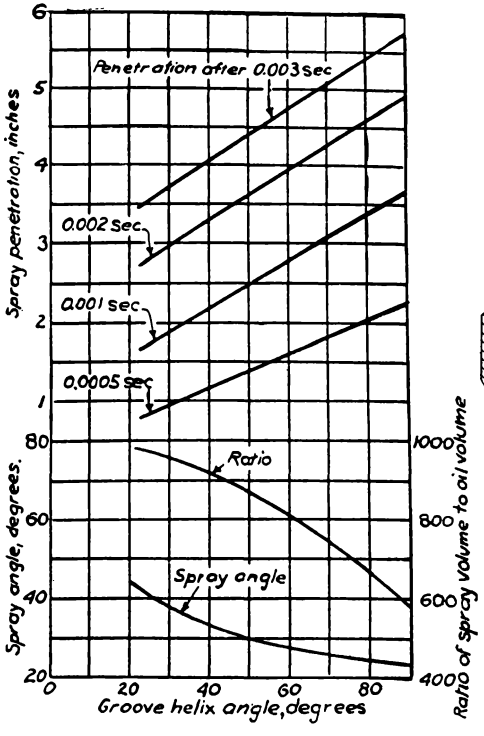

FIG. 102.—Results of N.A.C.A. Tests.

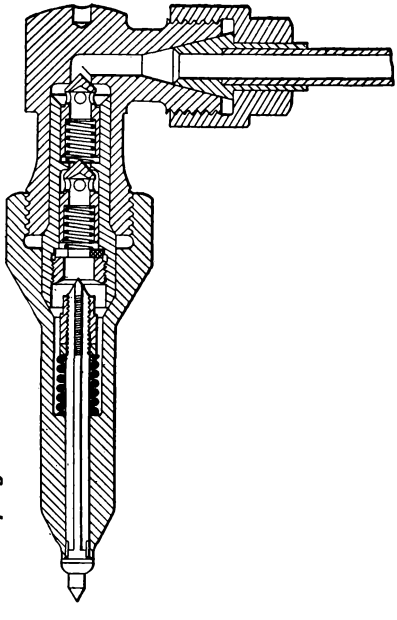

FIG. 103.—Tartrais-Peugeot Nozzle.

however, is for air injection. The high pressure air enters at *A*, and the fuel oil through *F*. The oil and air pass through a series of perforated disks before being injected into the cylinder. The purpose of the perforated disks is to assist in breaking the oil up into small droplets, and to mix it uniformly through the injection air charge.

The injection valve is pushed open by a cam at the time of injection. Many air injection valves have the conical seat reversed, and

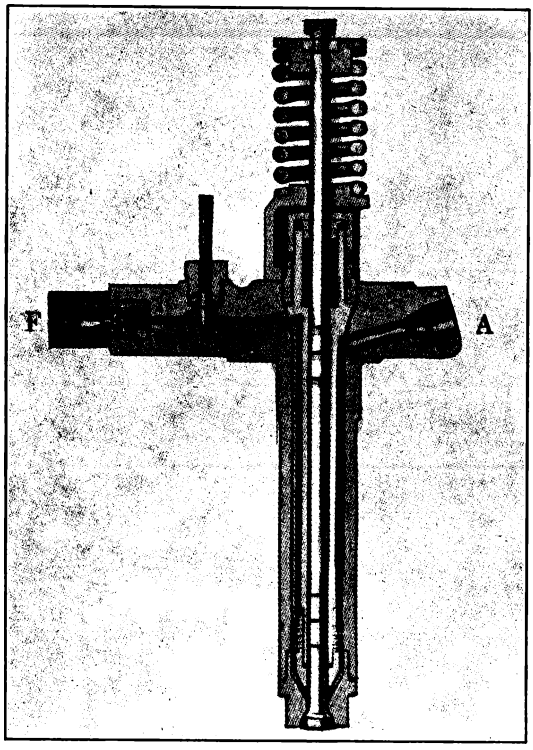

FIG. 104.—Worthington Nozzle.

the valve is then lifted from its seat by the injection cam as shown in Fig. 105.

COMBINATION PUMP AND NOZZLE

Some Diesel engine designers favor combining the fuel pump and injection nozzle in one unit, each cylinder then requiring such a unit. Using a 6 cylinder engine for comparison, we have on the one hand a single pump of 6 plungers and by-passes—feeding oil to 6 nozzles, the latter opening from the oil pressure generated by the pump plungers, and injecting fuel into the combustion space under pressure.

On the other hand we have a low pressure pump, a distributor or "common rail" feeding oil to 6 storage cells, from which 6 individual cam and push-rod operated plungers inject fuel under pressure into the combustion chamber.

The merits and demerits of either system are well known. The long pipe lines under high pressure are sometimes the cause of trouble with the former system; the difficulty of equalizing fuel pressure, and of readily varying the uniform amount of fuel to be fed, when using rocker arms and (long) push rods, are the problems encountered with the latter system. However, both systems are in use.

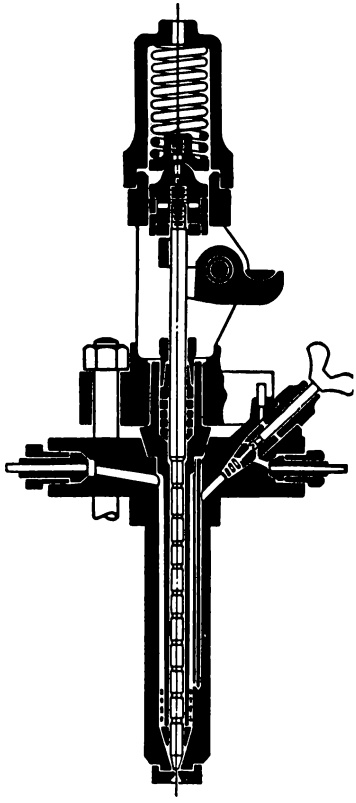

FIG. 105.—Typical Air Injection Nozzle.

Cummins Fuel System. In the Cummins fuel system, Fig. 106, the fuel is fed to the cylinders by a single pump. The oil is directed to the various cylinders by a distributor, and the injection of the fuel into the combustion chamber is by means of a plunger in each cylinder head. The plungers are individually operated from a common camshaft by push rods and rocker arms.

The injection plunger moves upward as the fuel pump delivers oil to it under about 60 pounds pressure on the suction stroke of the piston. The plunger moves down and injects the oil into the cylinder at the end of the compression stroke. The amount of oil is governed by the variable-stroke metering pump.

Dorner Combination Pump-Nozzle. The Dorner fuel injection system consists of individual combination pumps and nozzles, one for each cylinder, but all operated from a common camshaft. The pumps proper, Fig. 107, are actuated by push rods whose lifts can be varied by a lever, thus permitting a variation in the fuel supply according to the speed of the engine. The period of injection is constant, no advancing mechanism being provided. Lever *R* regulates the amount of fuel.

The Dorner combination pump-nozzle is being used on 4 cylinder automobile Diesel engines and was used on Packard Diesel airplane engines. It has an open-type nozzle with an adjustable metering pin for varying the area of the nozzle opening.

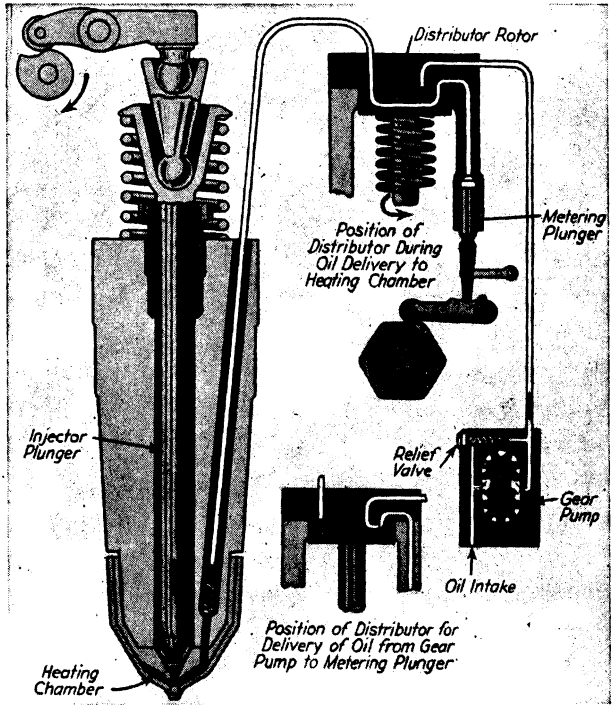

FIG. 106.—Cummins Injection System.

Frey Combination Pump-Nozzle. The Frey combination pump-nozzle as illustrated in Fig. 108 permits both the variation of the quantity of fuel to be injected and the changing of the injection period. Advancing and retarding the injection period is regulated by means of the lever *A*, by advancing or retarding the position of the rocker in relation to the cam, and the amount of fuel to be fed is controlled by the lever *B*, which operates the fuel by-pass, and thus increases or decreases the amount of fuel to be injected into the cylinder.

The Frey pump-nozzle thus meets the demands of automotive service, and the elimination of all piping is a point in its favor.

Hesselman Combination Pump-Nozzle. The Hesselman combination fuel pump and nozzle, Fig. 109, is a unit complete in

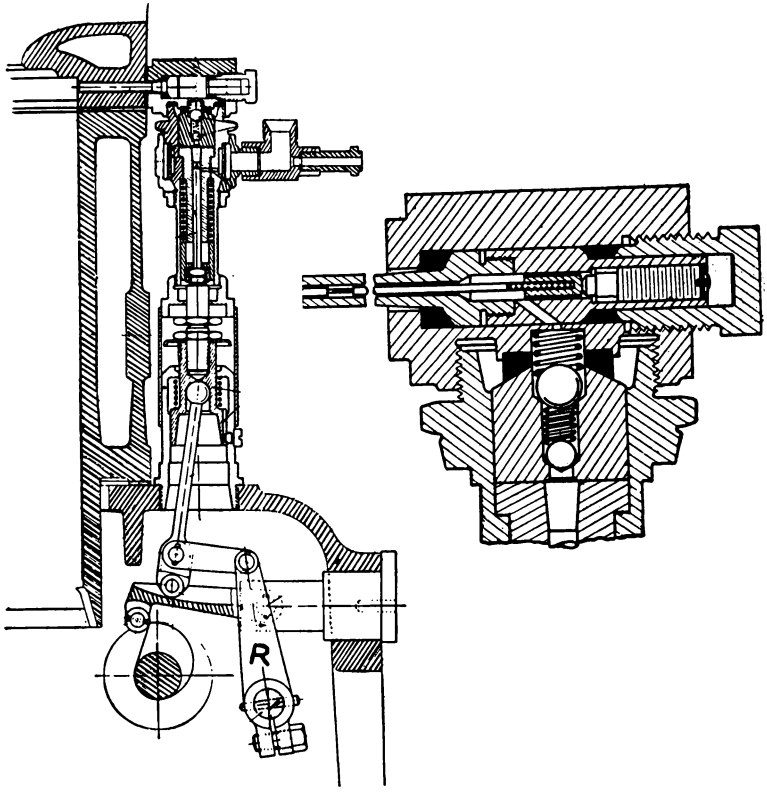

FIG. 107.—Dorner Pump and Nozzle.

itself. It is operated from the engine camshaft, and one unit is fitted for each engine cylinder. The plunger barrel is fitted with an adjustable casing which can be screwed up, thus raising the plunger free of the cam motion. The pump can then be dismantled without disturbing the operation of the other units.

The fuel injection is varied by the tappet on the control shaft, which limits the suction stroke of the plunger. This causes the beginning of injection to advance as the quantity of fuel is increased. The end of the injection period is obtained by a spill valve which is

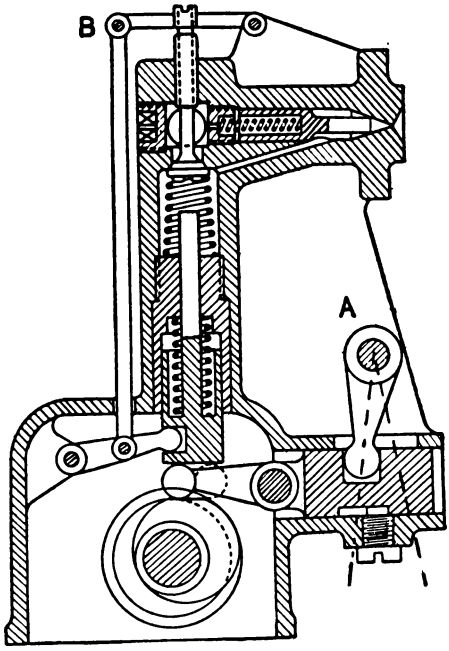

FIG. 108.—Frey Combination Pump-Nozzle.

opened by the pump plunger. This spill valve is held closed by a strong spring which prevents the valve opening until the plunger lifts it. A spring loaded membrane plate is mounted above the spill valve to prevent vibration and pulsations due to the quick starting and stopping of injection.

Winton Injector. After building Diesel engines for many years with common-rail injection systems, the Winton Engine Corporation has introduced a new injector. In this new system, Fig. 110, the oil is supplied under about 20 lb. per sq. in. pressure to the individual injectors mounted in the center of each cylinder head.

The fuel oil enters near the top on the left side of the body. After passing through the filter in the inlet passage, the fuel oil fills the annular supply chamber around the bushing. The surplus oil supplied by the low pressure pump flows out of this chamber through the outlet passage on the right side of the body.

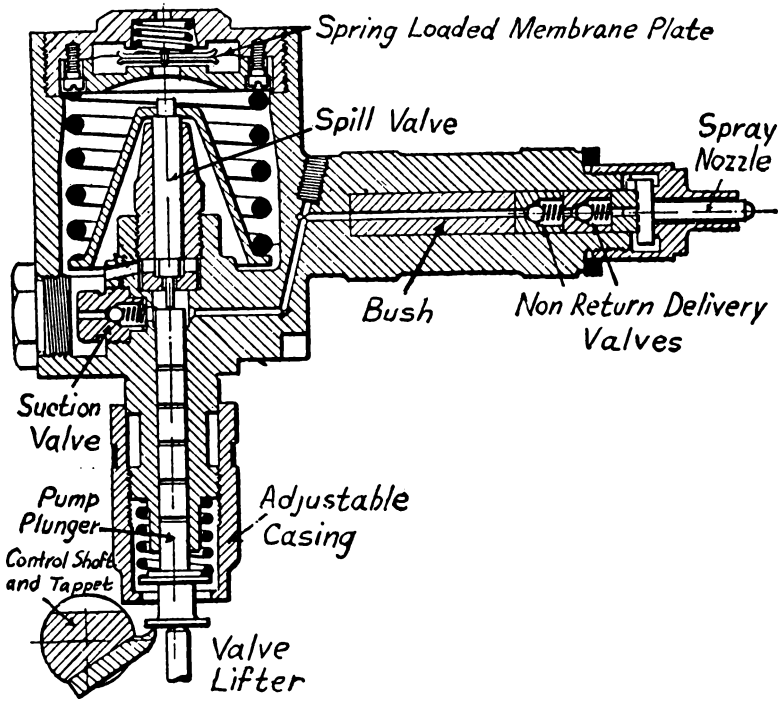

FIG. 109.—Hesselman Pump-Nozzle.

The injector plunger is operated by the engine camshaft through a push rod and rocker arm. This plunger has two motions—reciprocating motion to inject the fuel, and a rotary motion to vary the amount of fuel—according to the load. The operation is shown in Fig. 111. The plunger is rotated by a rack *A* (Fig. 110), which meshes with a gear splined to the plunger. The rack *A* connects to the governor and the hand control.

The fuel is injected through a conventional differential pressure multi-hole nozzle.

Atimco Injection System. An interesting departure from the conventional injection system has been developed by the Atlas Imperial Diesel Engine Co. The diagrammatic arrangement is shown in Fig. 112. The injection system consists of a pump unit, an ac-

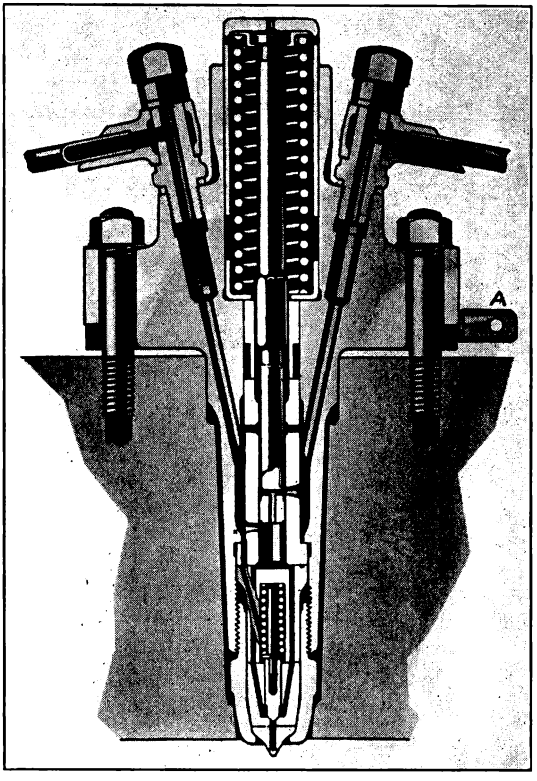

FIG. 110.—Winton Injector.

cumulator, a governor control unit, a distributor and Bosch-type nozzles.

The pump unit delivers the oil at injection pressure to the accumulator from where it returns to the port *F* of the piston valve *G*, which is the lower part of the pump plunger. On the downward stroke of the pump plunger, oil flows from *F* to *H* to begin the injection. The oil passes from *I* to *L* through the governor unit. The end of the injection is controlled by the valve *J*, which closes

the port *I* on its downward stroke. The oil passes through the distributor unit to the proper cylinder. Just after the valve *J* covers port *I* and stops injection, it connects port *L* with port *D* and relieves the oil pressure in the line of the nozzle, thus causing quick cut-off and preventing the dribbling of the nozzle.

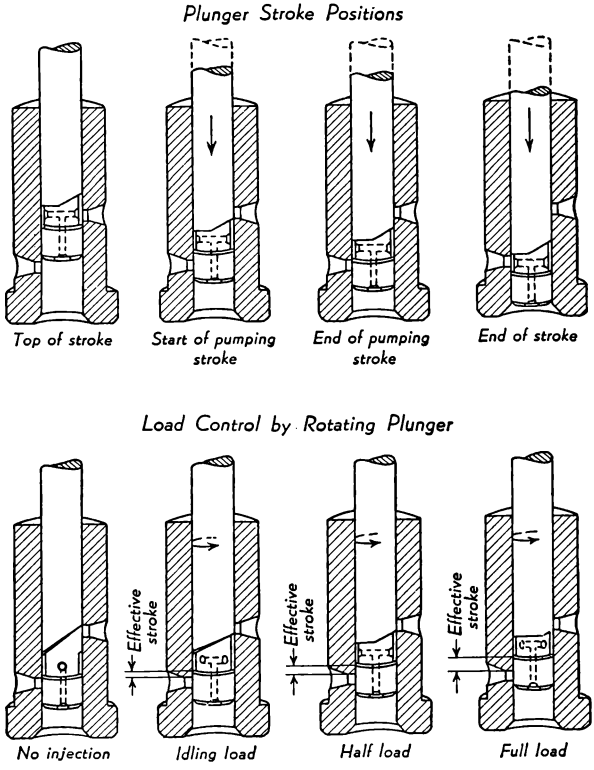

FIG. 111.—Winton Injector Operation.

The end of injection is controlled by the governor through rotation of the eccentric shaft *W*. Stationary and industrial engines have a fixed advance for the beginning of injection, but the marine engines have a variable length crosshead operating the pump unit. This crosshead is lengthened or shortened for the low or high speeds, respectively, of the engine. This causes earlier opening of the port *H* for high speeds and later opening for low speeds.

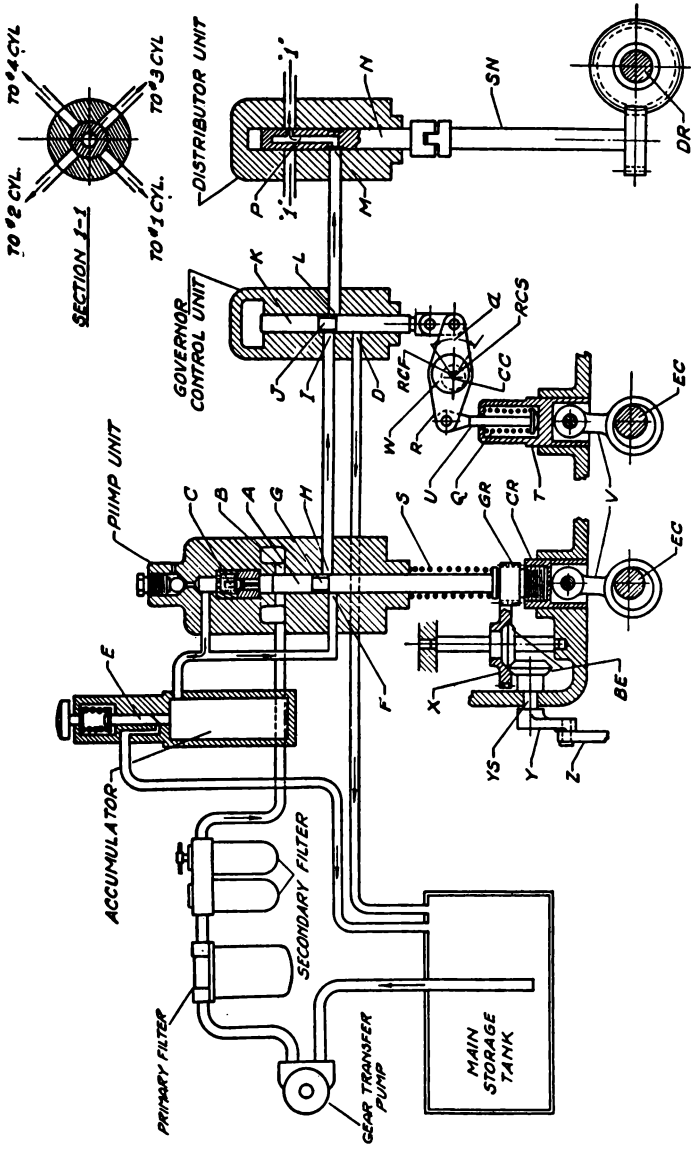

FIG. 112.—Atimco Injection System.

CHAPTER 8

COMMON RAIL AND AIR INJECTION SYSTEMS

Although most Diesel engines use the jerk-pump injection systems that have already been described, there are several successful Diesel engines being built using the common-rail system. One of the main disadvantages of this system is the tendency to develop leaks at the injection valve seat, which is required to hold against the constant injection pressure in the oil manifold.

Superior System. The common-rail fuel system used by the National Supply Company on their Medium-speed Diesel engines is the conventional type, as is shown diagrammatically in Fig. 113.

This shows the fuel system for a four-cylinder engine. The high-pressure fuel pump is shown at *A*, at *B* is located the accumulator manifold and one of the nozzles is shown at *C*. The pump maintains high pressure oil in the manifold which is injected into the cylinders when the nozzles are opened by the camshaft through push rods and rocker arms. The amount of fuel injected depends mainly upon the length of time the nozzles are held open. This is controlled by wedges, which vary the length of the push rods.

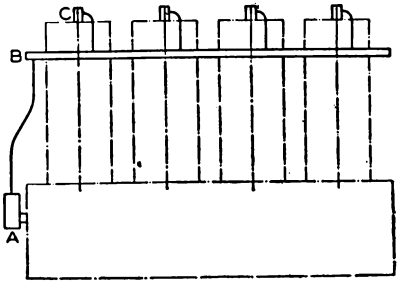

FIG. 113.—Diagrammatic Arrangement of Common Rail Fuel System.

In Fig. 114 is shown the two-cylinder high pressure fuel pump. The pump delivers only sufficient oil to maintain the desired pressure in the manifold. This is done by a controlled suction-bypass valve. The closing of the suction valve is controlled by an inclined plane on the crosshead through the rocker arm 1634. This arm is mounted

on an eccentric 1639, which may be rotated by the pressure regulator spring 1614. On some engines the oil pressure is regulated by the adjusting screw 1619, while on others the speed of the engine varies

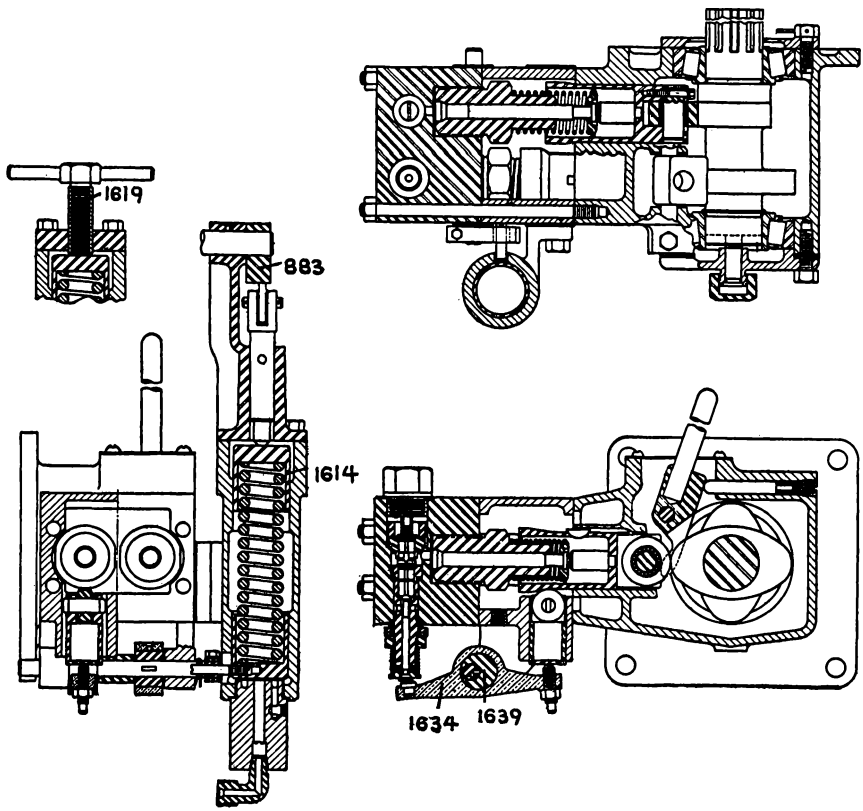

FIG. 114.—Superior Fuel Pump.

with the position of the cam 883 so that the oil pressure increases with the engine speed.

The common rail fuel nozzle is shown in Fig. 115. This spring-loaded valve is opened by the rocker arm 519 at the time of injection. It is claimed that periodic inspection of these valves will prevent dripping.

Cooper-Bessemer System. The constant pressure, or "common rail," system employed by the Cooper-Bessemer Corporation varies

from the conventional in an attempt to overcome its disadvantages. The principle being to provide an atmospheric relief for the nozzle at the end of injection. In order to do this, the high pressure oil is supplied to an injector block assembly, which is built with as many as four units in one block. This injector block and an enlarged view of the injection valve are shown in Fig. 116.

The injection valve *D* is operated by the push rod *A*. Fuel pressure from the constant-pressure header is always acting on the top of valve *D*, through the inlet *E*. During injection the valve is lifted by its push rod, and fuel flows past the valve seat and through passage *C* to the Bosch-type nozzle. With the seating of the valve *D*, the push rod moves away slightly from the valve. There is a small hole drilled through the push rod which communicates with port *B*, which in turn is connected to the fuel supply tank. This relieves the pressure on the nozzle and also permits any leakage past valve *D* to return to the fuel tank.

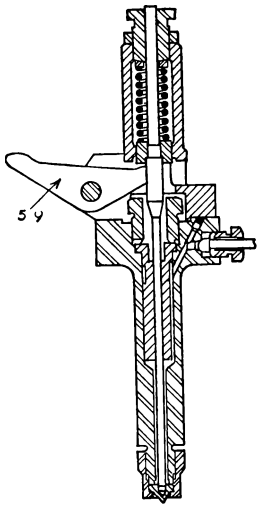

FIG. 115.—Superior Common Rail Fuel Nozzle.

The injection is controlled by the governor by the rotation of the eccentric shaft *F*.

The high-pressure oil pump is shown in Fig. 117. The pump is mounted below the camshaft. This permits the lubricating oil to be circulated through the openings *A* without contact with the fuel oil.

Air Injection. Although all medium and high-speed Diesel engines use solid injection, some of the large stationary engines use air injection. It offers a simple method of distributing the fuel throughout a large combustion space, but requires the use of a high-pressure air compressor.

One example of such a system is that used by the Allis Chalmers Manufacturing Company which is shown in Fig. 118. During the suction stroke of the piston, a charge of fuel oil is delivered to the passage of the open injection nozzle. The actual injection occurs

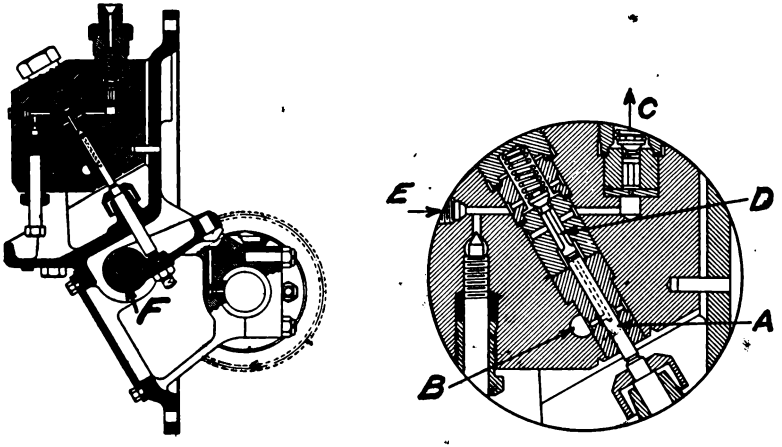

FIG. 116.—Cooper-Bessemer Injection Block.

when a cam opens the injection air valve near the end of the compression stroke. During about 10 per cent of the stroke, the high-pressure air picks up the oil charge and sprays it into the combustion space. The quantity of fuel injected is controlled by the governor, which varies the volume delivered to the nozzle. The injection air is supplied by a two- or three-stage compressor.

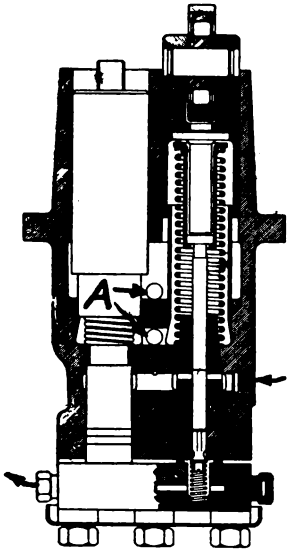

FIG. 117.—Cooper-Bessemer Fuel Pump.

In the system just described, the oil is delivered to the nozzle under very low pressure. The more common air injection systems use a closed injection nozzle where the oil charge must be delivered to the nozzle against the high pressure of the injection air. The actual injection takes place when the valve is opened allowing the air and oil to pass into the combustion chamber. Such a system is illustrated in Fig. 119.

Fuel Tubing. The tubing connecting the pump with each individual injector should be made of seamless drawn-steel. The cus-

tomary size for high-speed engines (bore less than 8 inches) is 0.125 in. inside diameter and 0.250 in. outside diameter, with the necessary unions brazed on. To avoid breakages due to vibration, it is advisable to heat treat the whole assembly after the unions have been brazed to the tubing, by heating to 1550° F. and then quenching in water. This should be followed by drawing to 1000 to 1200° F.

It is important that the several tubings of multi-cylinder engines be of approximately the same length, never varying more than 20

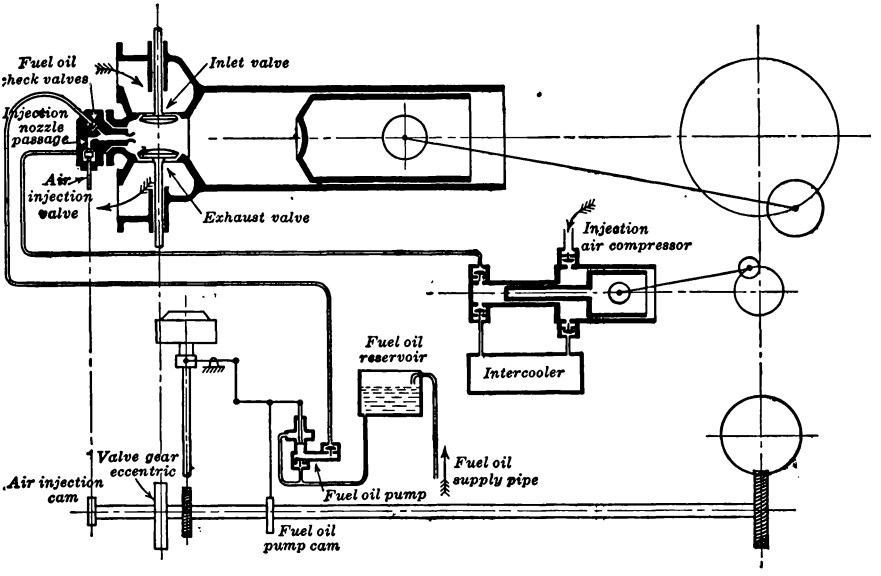

FIG. 118.—Allis Chalmers Air Injection System.

inches. The position of the fuel pump being fixed, it is manifest that the distances from the pump to the various injectors vary with the location of the cylinders; many designers make all tubes of the same length, coiling those feeding the injectors nearest to the pump. The coil in any one tube should not be of a diameter less than 2 inches, however. The tubes should be held by brackets located about midway between the pump outlet and the injector so as to allow for even deflection. The coiled part of any tubing should never be bracketed, as this would prevent the necessary expansion,

and the coil is best located within a short distance of the pump outlet, where the pressure is greatest.

Since the fuel piping is subjected to high pressures (up to 10,000 lb. per sq. in. and more) and also to vibration, the fittings used to

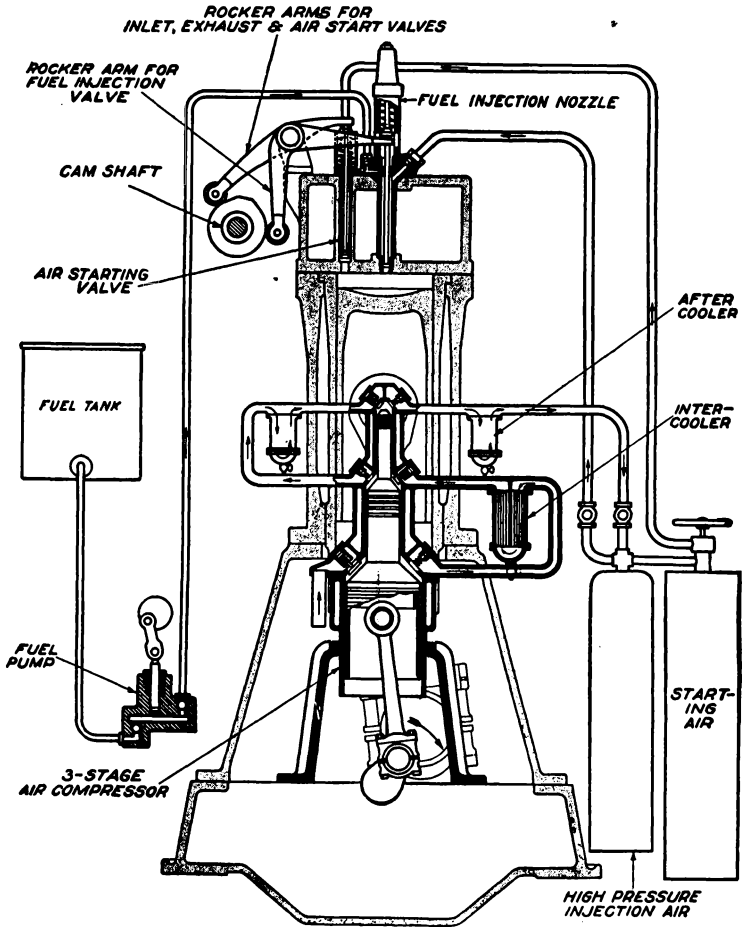

FIG. 119.—Typical Air Injection System.

fasten the tubing to the pump outlets and to the nozzles must be well designed.

Typical constructions are illustrated in Figs. 120 to 123. The customary method is to braze the fittings onto the pipes. European

practice prefers the use of silver solder for all the connections.

Welding the fittings to the tubing by either acetylene flame or electric arc is in disfavor; the frequent ruptures encountered are mainly due to the lack of adequate annealing after the completion of the welding operation.

The welding, or even the brazing, is often blamed for failures not caused by either, but rather by faulty fittings. The latter should

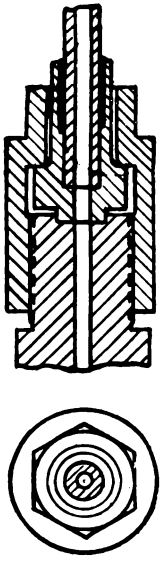

FIG. 120.—Flat Seat Connection.

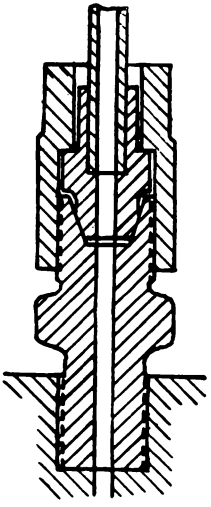

FIG. 121.—Conical Seat Connection.

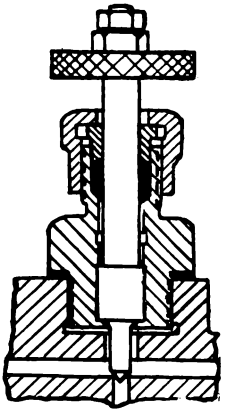

FIG. 122. — Beveled Seat Connection Knurled Knob Controls a Needle Valve to Clear the Line of Trapped Air.

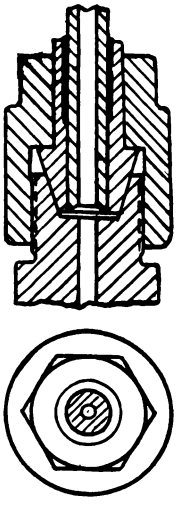

FIG. 123.—Conical Seat Connection.

be of such design and proportion as to permit sufficient length of contact between tubing and fitting.

Fig. 121 shows a fitting entirely too short for a good grip; Fig. 120 illustrates a better arrangement, and Fig. 123 shows a really long fitting able to hold the tubing securely.

Pressure Waves in Fuel Pipes. It is of prime importance to keep the length of the injection pipes (the tubing leading from the pump proper to the nozzle) as short as possible. The English Electric Company has made exhaustive tests relative to the effect long piping has upon the injection pressures. In Fig. 124 it is shown that a short tube delivers in excess of 4000 lb. per sq. in. of pressure if

the initial pressure is approximately 4400 lb. per sq. in. With a long pipe, an initial pressure of 5100 lb. per sq. in. will deliver but approximately 3900 lb. per sq. in. of pressure at the nozzle, Fig. 125.

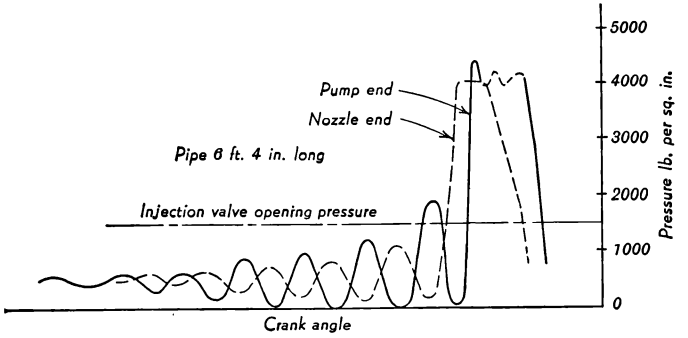

FIG. 124.—The Effect of a Short Pipe.

The pressure waves set up within the fuel piping have been thoroughly investigated by Davies and Giffen,* and are shown in Fig. 126. These waves cause pressure variations which may affect the

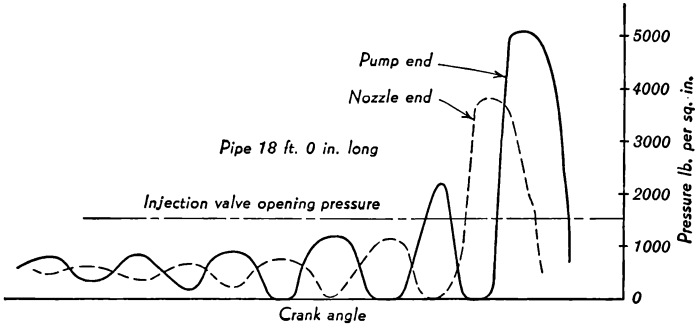

FIG. 125.—The Effect of a Long Pipe.

injection pressure. Such waves are surging back and forth and may be in whole or in part reflected back at the nozzle. Fuel pumps supply a pressure of from 1000 to 10,000 lb. per sq. in. at regular intervals, and pressure waves travel within the piping at the speed of sound. In Davies' and Giffen's tests, spring-loaded nozzles were

* S. J. Davies and E. Giffen, Proc. Inst. Aut. Engrs., 1931-32.

used, at speeds of 300 and 600 r.p.m. The pipe used was 3 ft. long and 2 mm. bore.

To analyze these fuel waves, a typical case may be cited. Injecting fuel at a pressure of 1390 lb. per sq. in. (at the pump), it was found that during the delivery period of 0.004 second, the

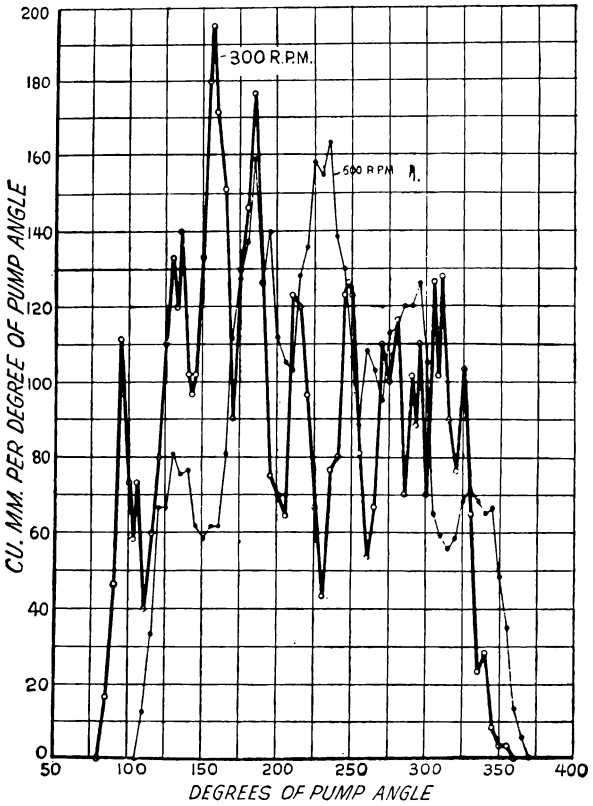

FIG. 126.—Pressure Wave in Fuel Pipe.

fuel pressure rose to a maximum of 4910 lb. per sq. in. The piping used during this test was of 0.044 in. bore and 23 in. long.

While the period of operation of the pump was but 0.004 second, actual fuel delivery at the nozzle was for a period of 0.0064 second or 60 per cent longer than the pump delivered. However, the pressure fell from the maximum of 4,910 lb. per sq. in. main-

tained during 0.004 second to 1,390 lb. per sq. in. for the final 0.0024 second.

At the beginning of the fuel delivery there was an interval of 0.0004 second before fuel delivery commenced. This period, known as the fuel injection lag, is the period it takes to transmit the pressure through the piping.

It is manifest that the least lag is desirable, hence fuel piping should be kept as short as possible.

Compressibility of Fuel Oil. The compressibility of fuel oil was investigated by D. H. Alexander (Trans. Inst. of Marine Engineers, 1927-1928) for pressures up to 5000 lb. per sq. in. He found that there was a 1 per cent reduction in volume for approximately 3000 lb. per sq. in. pressure. The rate of volume reduction was slightly greater at the lower pressures than at pressures above 3000 lb. per sq. in.

Glow Plugs. Glow or heater plugs are standard equipment for many high-speed Diesel engines. In starting a cold engine, great difficulties are frequently experienced, since the cold engine will absorb a considerable amount of heat from the compressed air, with the result that the compression temperature is so low that auto-ignition of the fuel-air charge fails to take place.

Even in extremely high-compression engines, i.e., engines with a compression ratio of 18:1 or over, cold starting will result in late or partial combustion, or no ignition at all in many engines.

Late or partial combustion will result in hammering and pounding which is destructive to bearings and working parts. Ignition failure may have even more dire results in that the unburned fuel left within the combustion chamber may unite with the incoming fuel charge at the next firing stroke and then may result in an explosion-like combustion likely to do serious damage to the engine. Many engines are equipped with pressure relief valves as a protection.

Starting difficulties are many times overcome through the use of glow plugs. The element is electrically heated to perhaps 2000° F., which temperature is reached within 15 to 30 seconds after the current is turned on.

Glow plugs are often called heater plugs, on the theory that the heat emanating from the resistance element of the plug raises the compression temperature within the combustion chamber of the engine. This is erroneous. The glowing element acts as a catalytic igniter, taking the place of a spark plug; it simply could not heat the fuel-air charge to a sufficient temperature to secure self-ignition within the short space of time available. After the engine has been fired by means of the glow plug for a sufficient length of time, the current can be switched off.

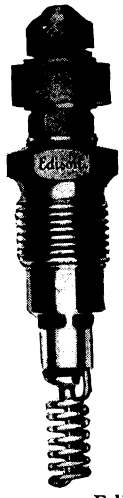

FIG. 127.—Edison Double-Pole Glow Plug.

The location of the glow plug is of vital importance; it must never be placed directly in the path of the fuel spray, as rapid corrosion will result. The glow plug should also not extend far into the combustion chamber nor be located in close proximity to the exhaust valve; otherwise it could be injured by the action of the burning gases.

Glow plugs are made in both single and double pole types, Figs. 127 and 128. Each single pole plug has a direct wire from the starting battery or other source of low voltage electrical energy, while the double pole plugs are wired in series. The shape and length of the heating element is dependent upon the combustion chamber design and the location of the plug.

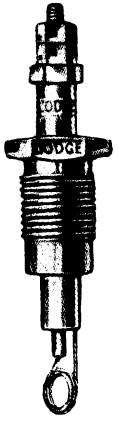

FIG. 128. — Lodge Single-Pole Glow Plug.

Starting Without Glow Plugs. The cost and fragility of glow plugs, along with the fact that they are of little assistance in some types of combustion chambers, has induced designers to seek other means of starting to eliminate them, and to attempt starting high-speed Diesel engines without the aid of forced ignition.

Engines built a decade or so ago, especially those of the heavy-duty stationary or marine type, were started by preheating the combustion chamber and cylinder by means of blow

torches, or by forcing boiling water or steam through the water jackets of the engine and preheating the air to be drawn in by the valves. Either method would permit the engine to start more or less readily, but both methods are cumbersome, time-robbing, and therefore not altogether practical.

One novel method of starting a cold engine is that originated by Jendrassik of Hungary.

Under normal running conditions, the intake valve of an internal combustion engine opens at or about top-dead-center and closes some 30 deg. to 50 deg. past bottom-dead-center. For starting purposes, Jendrassik keeps the intake valve closed until the piston has traveled some 155 deg. past top-dead-center, thus causing a vacuum within the cylinder. Then, when the valve does open, the incoming air rushes into a vacuum and its temperature rises according to the physical law which states that the kinetic energy of flow is transformed into heat energy when the air finally comes to rest.

The rise in temperature under the Jendrassik system is sufficient to ensure spontaneous combustion. While the compression ratio of the Ganz-Jendrassik Diesel engine is but 12.4 to 1 and thus would normally have a compression end-temperature of 605° F., (insufficient for self-ignition), Jendrassik, by his special system, realizes an end-temperature of 985° F., more than sufficient for auto ignition. The efficiency of this scheme may best be pointed out by stating that, under ordinary conditions, a compression ratio of 26 to 1 would be needed in order to reach a compression temperature of 895° F. with a cold engine.

In operation, the Jendrassik arrangement requires a multi-cam camshaft sliding in its bearings so that either the normal or starting cams may engage the valve lifters.

Chapter 9

COMBUSTION CHAMBER DESIGNS

The **Glow-head Diesels,** i.e., all those engines in which ignition is caused by the fuel coming in contact with a "hot surface or hot spot" rather than by the heat generated by the high compression of air, are not strictly Diesel engines. The *open-chamber* engines, in which fuel is injected directly into the compression space and ignition is caused by the heat inherent in the highly compressed air, are truly Diesel engines. Turbulence of the air charge is the needed factor in high-speed Diesel engine practice, and unless his demand is satisfied, as some builders of open-chamber engines have more or less successfully done, this type of engine is not applicable to automotive service. What may be sound practice in a slow-speed Diesel, 300 to 750 r.p.m., may be totally unsuitable for high-speed engines operating at speeds of 2500 r.p.m. and over.

The open-chamber direct-injection type engine is one of the original Diesel-designed engines. Generally speaking, the open-chamber design requires higher temperatures than the ante-, turbulence-, or air-chamber constructions; hence a compression pressure of 450 lb. per sq. in. or over is usually required.

The open-chamber design is commonly used in low-speed Diesel engines and in several successful high-speed engines, partly because it is a "free" design, devoid of all patent infringement claims, and partly because it is a simpler form of construction and is inherently most efficient.

Attendu Open Chamber. The Attendu 2-cycle Diesel engine was intended as a power plant for American lighter-than-air craft. The open-chamber construction with a concave piston head is shown in Fig. 129.

The fuel injection is accomplished by an overhead, combination fuel pump and nozzle. A single overhead valve admits the pre-com-

pressed air; exhaust is by means of the usual ports within the lower cylinder, uncovered by the descending piston.

Hildebrand Open Chamber. The Hildebrand open-chamber construction consists of the usual clearance space between the piston

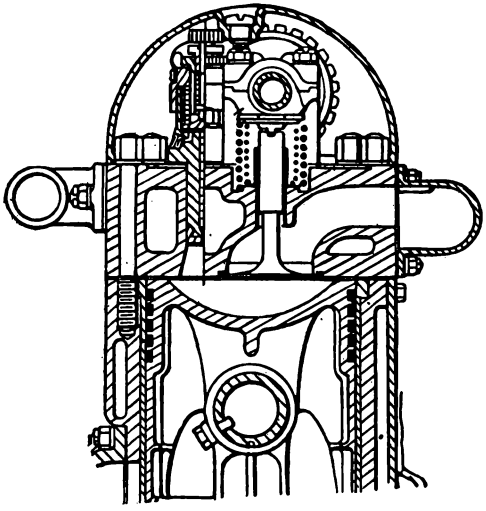

FIG. 129.—Attendu Open Chamber.

head and the lower part of the cylinder head, and in addition it features a fluted piston head, Fig. 130.

The flutings in the piston head are of exponential dimensions, narrow nearest to the injector nozzles and widening as the injected oil spray would widen out. The grooves in the piston and the direction of the fuel stream are so laid out that the oil droplets do not collide.

When a flat-head piston is used with a flat cylinder head, the combustion space is a very low, large diameter cylinder. It is very difficult to inject the fuel throughout this compressed air without much of it coming in contact with the cylinder head and piston. These piston flutes provide a somewhat symmetrical space for fuel injection. However, an unsymmetrical piston head such as this may give trouble from uneven expansion.

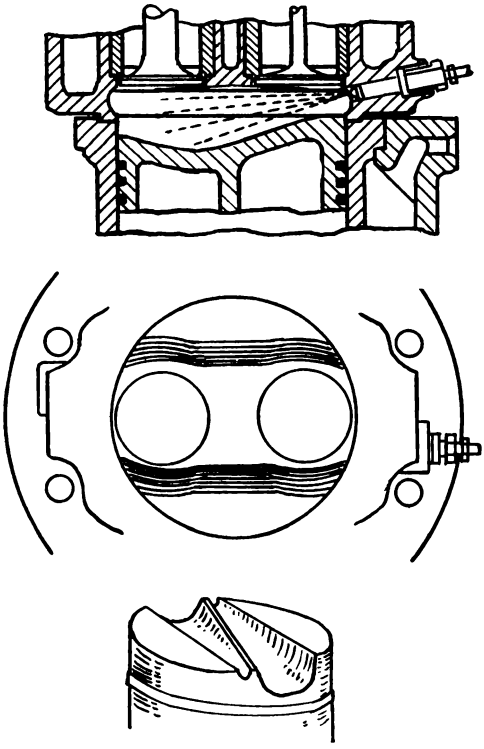

FIG. 130.—Hildebrand Open Chamber.

Junkers Open Chamber. The open-chamber construction of the Junkers engine is unique in that it consists merely of the clearance space between the two pistons. Fig. 131.

Fuel is injected by a single nozzle directly into this clearance space. The glow-plug, used for starting purposes only, is also shown. Many Junkers engines use two or four nozzles injecting from equally spaced positions around the combustion chamber. The cylindrical combustion space is much thicker than in a conventional engine, since the stroke of each piston is more than the cylinder bore.

Krupp Open Chamber. The Krupp design of open-chamber is merely a concave piston head, Fig. 132.

As will be seen, the intake valve is shrouded so as to cause the incoming air charge to revolve in circular fashion, approximating

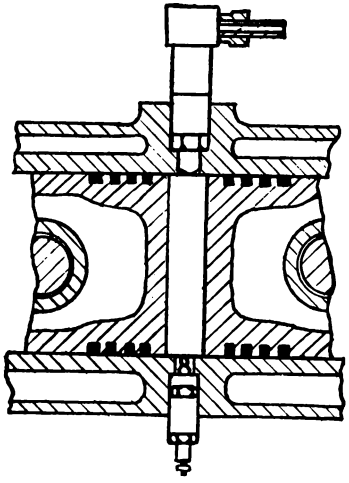

FIG. 131.—Junkers Open Chamber.

turbulence. The skirt on the exhaust valve stem protects the valve guide from the exhaust heat and tends to prevent accumulation of carbon on the stem.

To prevent undue cooling of the piston head, the lower side of the piston is protected against loss of heat by a baffle plate, which prevents the splashing oil from coming in contact with the piston head.

This shape combustion chamber is used by several manufacturers of rail-car and stationary Diesel engines, particularly in four-cycle engines where a flat cylindered head is desirable for the valve seats. This shape also prevents the oil from being sprayed against the piston head.

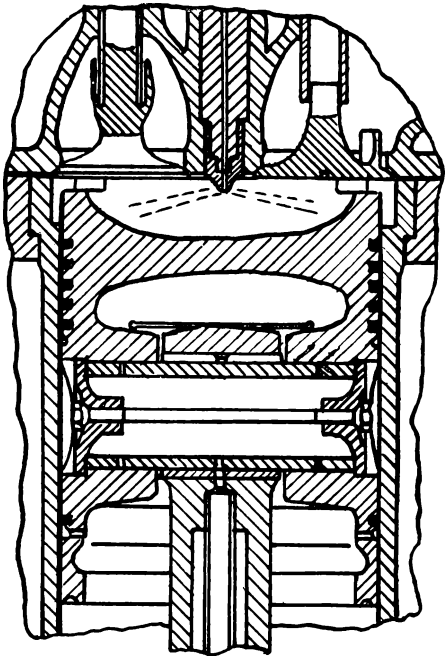

FIG. 132.—Krupp Open Chamber Design.

Leyland Open Chamber. The (British) Leyland Diesel engine contains an open-chamber consisting of an indentation in the piston head, as shown in Fig. 133.

In the Leyland engine, combustion takes place within the piston chamber; fuel is directed downward towards the piston head. The piston is made of heat-treated aluminum alloy, and hence does not act as a catalytic igniter. The high compression ratio employed with this engine assures auto-ignition. Near the end of the compression stroke, the air is forced into this combustion chamber at a high velocity, resulting in turbulence which aids combustion.

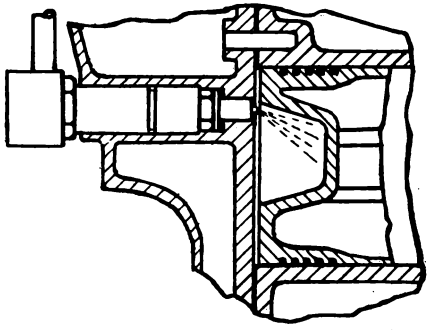

FIG. 133.—Leyland Open Chamber Design.

M.A.N. Open Chamber. The M.A.N. open-chamber construction permits the highest possible compression. Yet it is said that but 375 lb. per sq. in. suffices for auto ignition. This design is shown in Fig. 134.

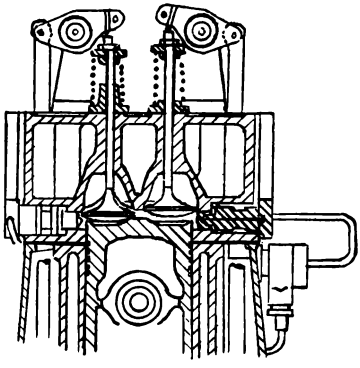

FIG. 134.—M.A.N. Open Chamber.

As will be seen, the very minimum of compression space is allowed in this construction. The piston barely clears the cylinder head; indentations within the head of the piston allow the exhaust valve to close late and permit the intake valve to open early. The two recesses within the piston head constitute the compression chamber. Fuel is injected by twin nozzles, each of which supplies one of the sections of the dual compression space formed by the two indentations within the piston head.

Maybach Open Chamber. The Maybach open-chamber design, as used in engines for airship, marine and railcar use, is shown in Fig. 135.

The Maybach open-chamber is merely an indentation in the piston head. The fuel injection is in a horizontal plane. Here again the air possesses turbulence which assists in obtaining quick combustion.

Michel Open Chamber. The Michel open-chamber, as illustrated in Fig. 136, consists of the clearance space between the 3

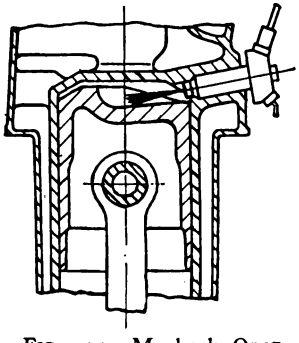

FIG. 135.—Mayback Open Chamber.

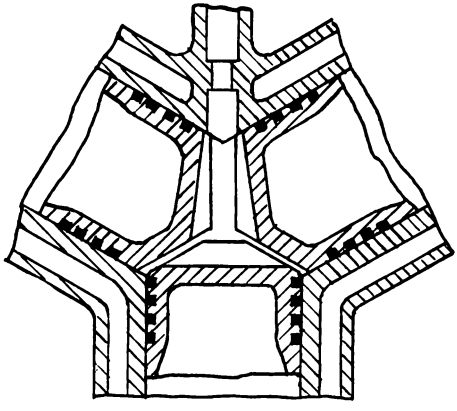

FIG. 136.—Michel Open Chamber.

pistons (arranged in star form) and of indentations within the heads of three pistons.

While such a combustion space is highly efficient, it can be used with 2-cycle engines only.

Packard Open Chamber. The Packard aircraft Diesel engine has an open chamber consisting essentially of an indentation of the piston head, Fig. 137.

The engine has but a single valve which performs the duties of an intake as well as an exhaust valve. The cam lifting the valve is so profiled that when the piston reaches top-dead-center during the exhaust stroke, the valve remains open, performing the duty of an intake valve, remaining open until the piston has passed bottom-dead-center on the compression stroke. Such a construction is possible only in Diesel engines, and has the merit of simplicity if nothing else. The fuel is injected into the recess of the piston.

Turbulence is imparted to the air not only by the action of the piston as it approaches top-dead-center, but also by the tangential flow of the air as it enters the cylinder at a high velocity through the venturi-shaped intake passage.

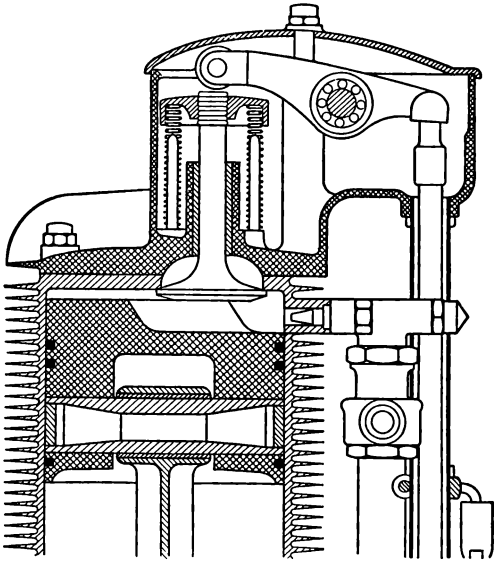

FIG. 137.—Packard Open Chamber.

Saurer Open Chamber. Saurer Bros. of Switzerland, having discarded the Acro-Bosch air-chamber construction, now feature an open chamber of their own design, Fig. 138.

The Saurer open-chamber consists of a hollowed-out piston head, a chamber of doughnut form. It is known as a swirl chamber. The swirl of the air is caused (1) by the tangential entrance of the air (Fig. 139) and (2) by the rotation of the air in the cupped piston head near the end of the compression stroke.

Practically all of the air is compressed in this chamber and then the fuel is injected from a multi-hole nozzle as shown. Very good results are claimed for this design even in high-speed engines.

ANTECHAMBER

The *antechamber,* in its original form, was but a glow head used as a catalytic ignited by Herbert Ackroyd Stuart and Charles R. Binney. They were the originators of this type of construction

and patented this feature in 1890. The antechamber was re-invented by MacCallum in 1891 and by Diesel in 1892. All of the varieties of subsequent antechamber constructions were germinated by Stuart's and Binney's fundamental conception.

It is a type in which practically all of the air charge is compressed into what may be termed an outer chamber and fuel then injected

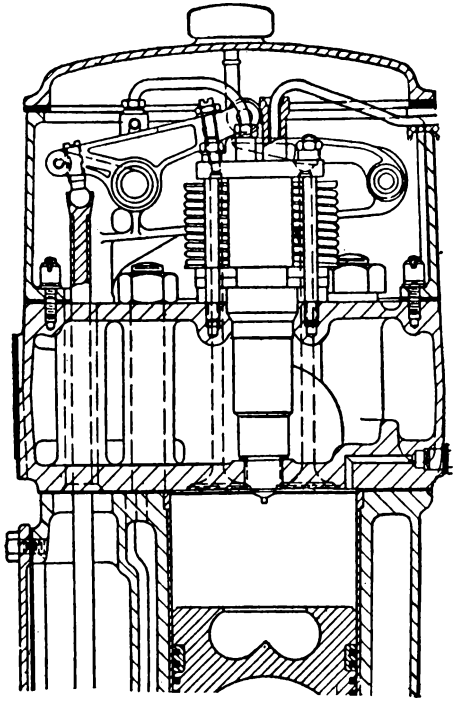

FIG. 138.—Saurer Open Chamber.

into this separate chamber for ignition and combustion. It is quite possible that both the glow head as well as the hot air, in equal or unequal degree, cause the ignition.

The antechamber type is one of the most popular, or at least one of the most used forms of Diesel engine construction. That some of the antechambers cause a blow-torch effect—heating the piston unduly or even causing the piston to crack in some cases—need not be held as an argument against antechamber construction;

it merely proves that the builder has not chosen the proper chamber position or form.

Combustion With an Antechamber. Holfelder* made tests, with the addition of an antechamber to a bomb, to determine the effect of the antechamber on combustion.

It is a well-known fact that, although antechamber engines may be started at lower compression ratios than open-chamber engines,

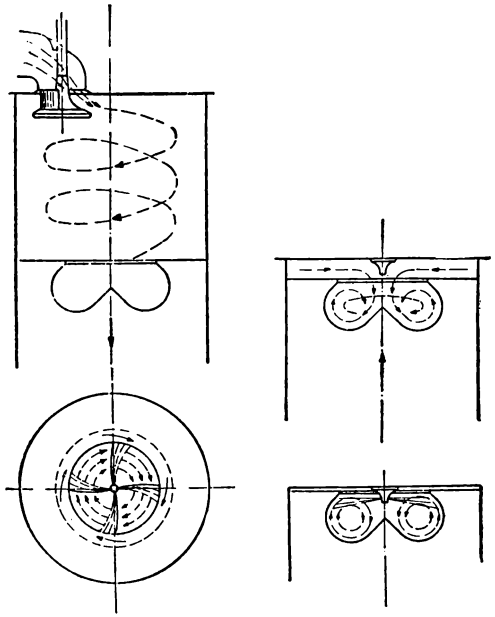

FIG. 139.—Diagram of Saurer Combustion Chamber.

their action is very sluggish until they have run long enough for the walls of the antechamber to store up heat to assist combustion. Glow plugs are used many times to give easier starting, particularly in cold weather.

Fig. 140 shows the results of some of the tests with the antechamber. The photographs show only the main combustion chamber of the bomb, the fuel entering from the antechamber at the top. *A* shows the operation with a cold antechamber. The combustion starts in the antechamber and injection into the bomb begins

* See p. 37.

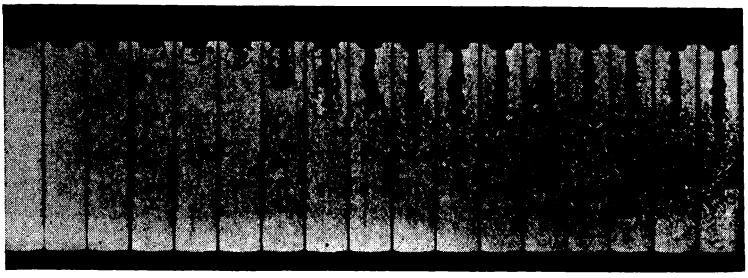

A. Cold Antechamber.

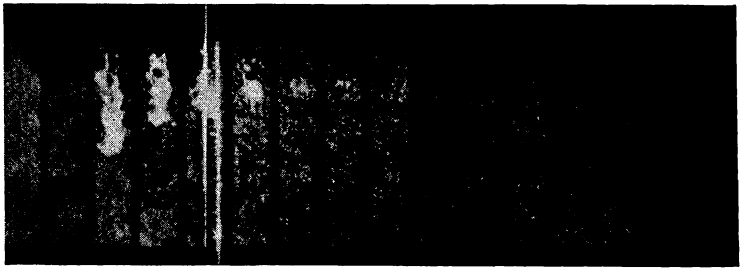

B. Cold antechamber with glow plug.

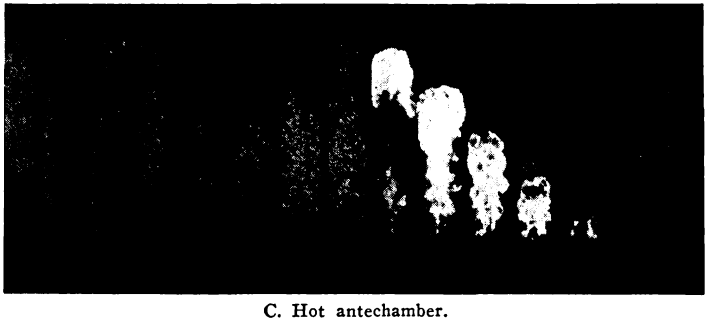

C. Hot antechamber.

FIG. 140.—Combustion when Using an Antechamber.

in the third picture. The action is very slow until the seventh picture, when an appreciable amount of liquid fuel appears, and even then there is very slow burning of the fuel in the bomb.

In *B*, a conventional glow plug was used to warm the antechamber for a period of 30 seconds. The discharge from the antechamber is much more rapid than in *A* as well as the combustion in the bomb. However, liquid fuel is entering the bomb throughout most of the pictures.

The walls of the antechamber were heated for test *C* by means of an electric heating element to approximate the temperatures found in actual engine operation. Here the combustion is much more rapid and complete with practically no evidence of liquid fuel being sprayed into the bomb.

These photographs serve to show the relative action in an antechamber engine under different temperature conditions. They do

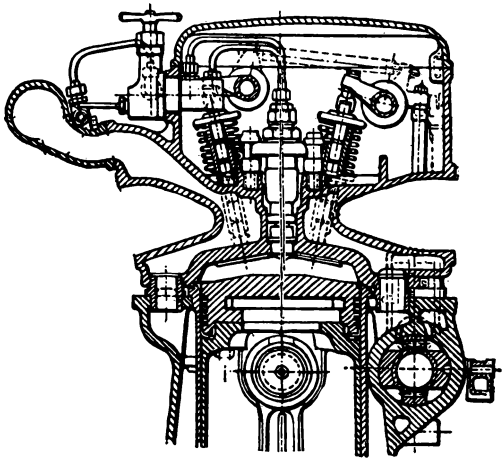

FIG. 141.—Beardmore Antechamber.

not show the conditions encountered in actual engine operation since the fuel was injected into still air in all cases.

Beardmore Antechamber. The Beardmore antechamber, shown in Fig. 141, is of pear shape, located between the valves.

The compression space proper consists of the space between the crowned piston and the inclined cylinder head. Fuel is injected in a downward stream through the antechamber toward the piston head.

Caterpillar Antechamber. The Caterpillar Tractor uses an antechamber for tractor and industrial Diesel engines, Fig. 142. It is located in the cylinder head near the edge of the piston.

The chamber is air-space insulated and, therefore, will retain heat to aid in combustion.

Fuel is injected through a single-hole nozzle along the axis of the antechamber, which connects with the main combustion chamber through one small hole. At the end of the compression stroke, less than half of the air charge is in the antechamber, most of it being in the hollowed-out piston head.

Deutz Antechamber. A Deutz antechamber intended for high-speed automotive engines is shown in Fig. 143. The chamber is located in the cylinder head; small circular passages connect the

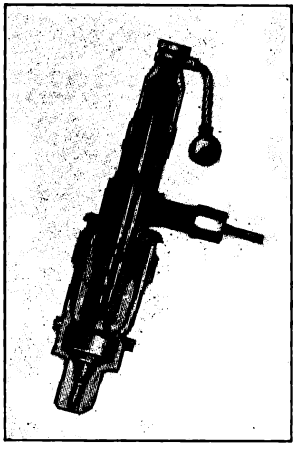

FIG. 142.—Caterpillar Antechamber.

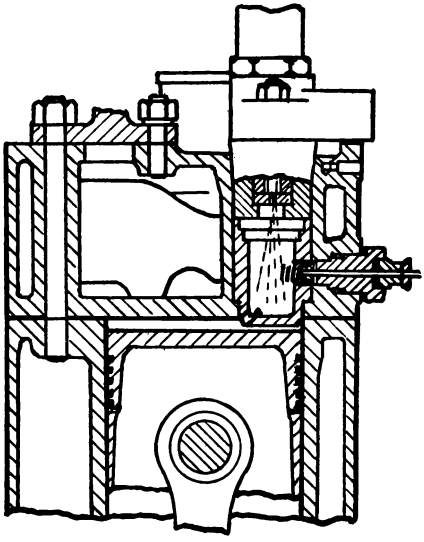

FIG. 143.—Deutz Antechamber.

antechamber with the combustion chamber proper. This type of chamber is used in the International Harvester Diesel engines now in common use on tractors in America.

The antechamber is removable. Since the walls of the chamber do not come in direct contact with the cooling water, much heat is going to be retained to aid combustion. This principle is very commonly used in high-speed antechamber and turbulent-chamber Diesels. A glow plug is provided to facilitate starting.

Hill Antechamber. The Hill chamber construction is in reality a dual chamber; i.e., an antechamber carrying the fuel nozzle and

an open chamber formed by the recessed piston. The construction is shown in Fig. 144. It will be noticed that the exhaust valve guide is shrouded to protect the valve stem from the hot gases.

The Hill Balanced Engine (opposed-piston type) embodies an antechamber, as shown in Fig. 145. Most opposed-piston type engines are of the open-chamber type, injecting fuel directly into the

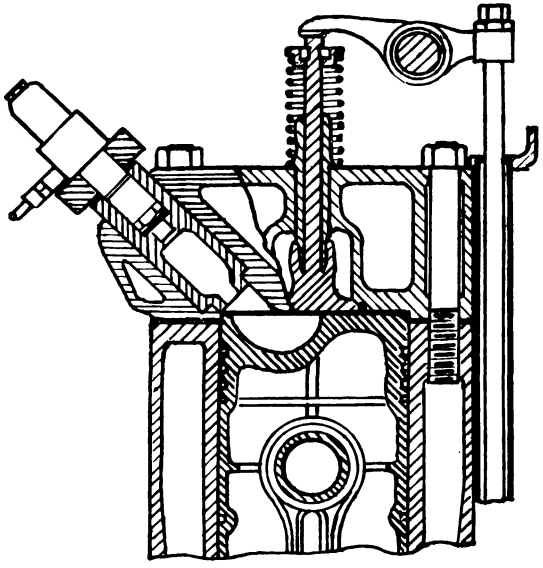

FIG. 144.—Hill Antechamber.

combustion chamber, but the Hill construction is an interesting departure from customary practice. Here an antechamber is used at one side of the flat cylindrical combustion chamber.

Koerting Antechamber. The Koerting (Sartorius) antechamber is shown in Fig. 146. The antechamber is of the doughnut shape, a narrow channel connecting the antechamber with the combustion chamber. Fuel is injected against the upper mouth of the channel. The head of the piston contains a steel insert, space-insulated from the piston proper. This antechamber design does not act as a catalytic igniter, since exhaustive tests have proved that

the temperature of the walls of the completely water-cooled antechamber, under all normal conditions, does not exceed 265° F.

Krupp Antechamber. The Krupp antechamber, as used for the air-cooled automobile engines manufactured by the firm, is shown in Fig. 147. The piston, made of an aluminum alloy, has a sloping head, so as to give a wedge form of combustion chamber. The antechamber is located on the side of the cylinder, connecting with the combustion chamber proper through a narrow orifice. The fuel stream as injected by the nozzle is directed against the restriction (the narrowest part of the orifice) and combustion takes place both in the antechamber and within the combustion chamber proper. The glow plug is located near the injection nozzle.

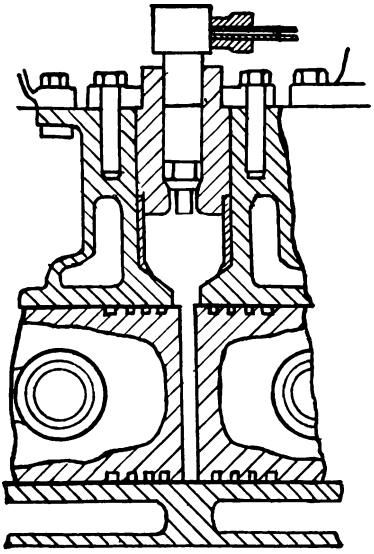

FIG. 145.—Antechamber, Hill Balanced Engine.

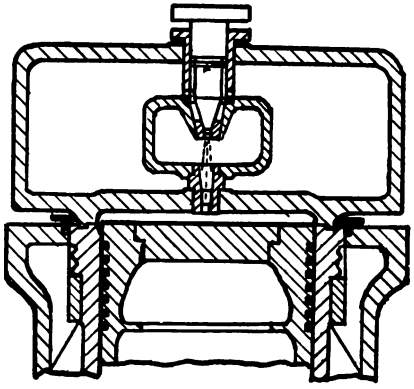

FIG. 146.—Koerting-Sartorius Antechamber.

Mercedes-Benz Antechamber. The Mercedes-Benz antechamber is shown in Fig. 148, located at one side of the piston. The same type chamber is sometimes located in the center of the cylinder head. The discharge of fuel to the combustion chamber is in the form of a wide cone rather than in a single stream as is common practice with most antechambers.

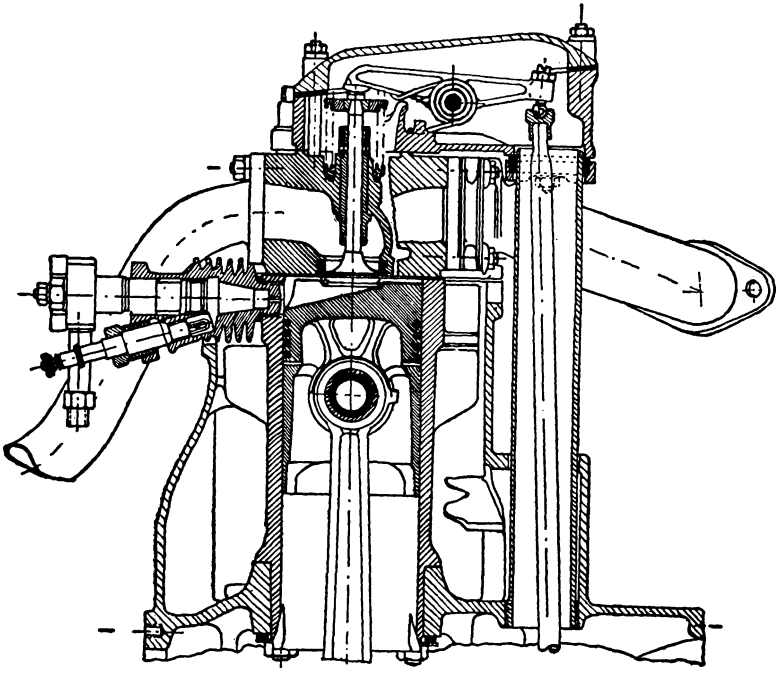

FIG. 147.—Krupp Antechamber for Air-Cooled Engine.

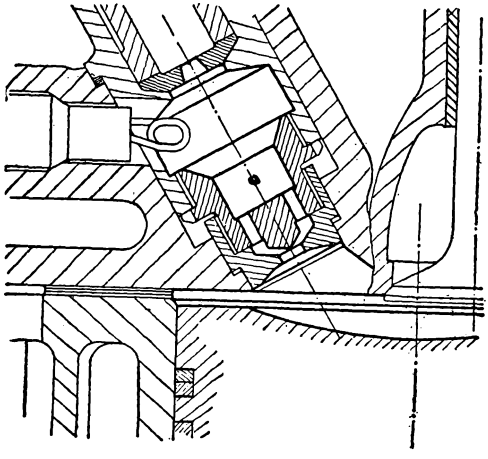

FIG. 148.—Mercedes-Benz Antechamber.

Price Antechamber. The Price antechamber is shown in Fig. 149. In reality it is an open chamber with a constriction. This type of chamber has been used by Ingersoll-Rand, De La Vergne and other American manufacturers. The fuel is injected from each side of the chamber.

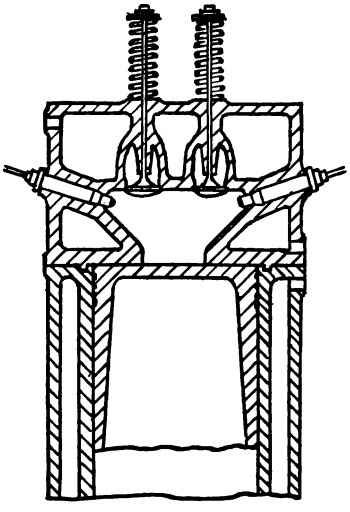

FIG. 149.—Price Antechamber.

Ackroyd Antechamber. Herbert Ackroyd Stuart and Charles R. Binney are the originators of an antechamber construction which became known as the Ackroyd. The original antechamber and "glow head" is illustrated in Fig. 150.

This design was changed into the so-called Ackroyd antechamber, which has been in use in oil engines for decades. This construction was for use on low-compression oil engines where additional heat was required to cause ignition. The antechamber was surrounded with a hood to retain the heat. Before starting, the chamber was heated

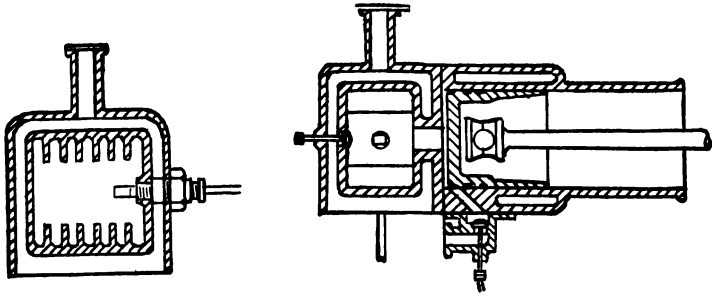

FIG. 150.—Stewart & Binney Antechamber.

by a blow torch, but after the engine was started, the heat retained from combustion produced ignition. The heating surface inside of the chamber was increased by the addition of fins.

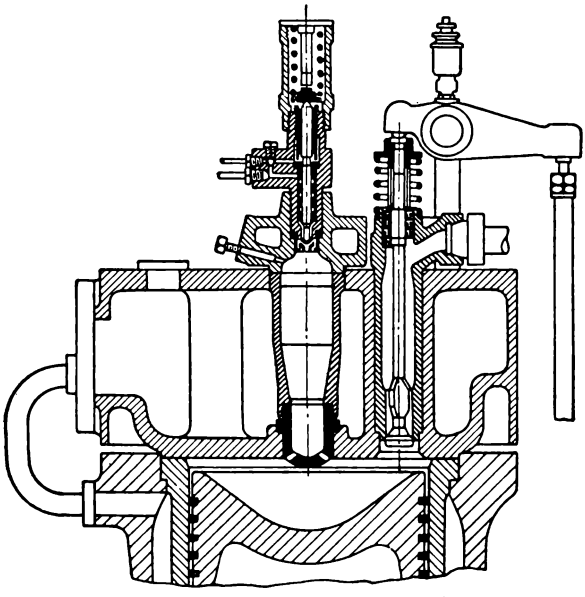

FIG. 151.—Sulzer Bros. Antechamber.

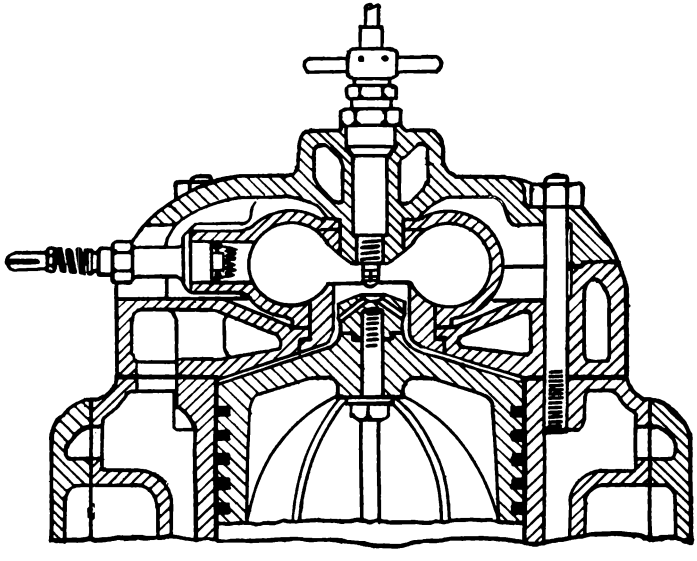

FIG. 152.—Tartrais Peugeot Antechamber.

Sulzer Antechamber. The Sulzer Bros. antechamber is illustrated in Fig. 151. It consists of a long cylindrical pocket with several small openings to the cylinder. It will be seen that most of the chamber walls are water cooled. However, the lower portion may retain heat to assist combustion.

Tartrais-Peugeot Antechamber. The Tartrais-Peugeot antechamber is of the doughnut type, which is feasible with 2-cycle engines. Fig. 152. The multi-hole fuel nozzle injects horizontal streams, which make a thorough mixing of fuel and air possible. The glow plug, used for starting only, is also shown.

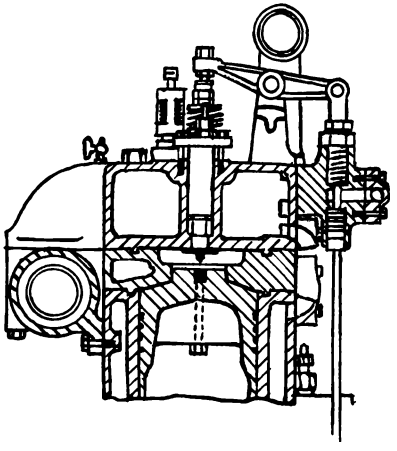

FIG. 153.—Wolverine Antechamber.

Wolverine Antechamber. The Wolverine antechamber consists of a flat recess bounded on the one side by the cylinder head and on the other by a raised piston head, Fig. 153. While called an antechamber, it is but a restricted open chamber.

TURBULENCE CHAMBERS.

The turbulence-chamber Diesel is that type in which most of the air charge is compressed into what may be termed a whirl chamber of somewhat spherical form. The fuel is then injected into this turbulence chamber for ignition and combustion.

Turbulence chambers are usually of the bushing type. The bushings are relieved so as to reduce their contact with the surrounding water-cooled walls, and they may be so designated that they do not touch the heat conducting water-cooled wall at idling speeds, thus retaining heat for subsequent ignitions, and at full load come in full contact with the cooling wall so as to absorb the maximum heat in order to prevent pre-ignition.

The compression pressure used in turbulence-chamber engines is approximately 450 lb. per sq. in. or more, amply high for compression ignition; yet experiments have proven that when the turbulence chamber is directly subjected to the cooling influence of the surrounding water jacket, engines are apt to miss at light load and sometimes even at full load. This, then, calls for minimum cooling of the chamber walls or, if generous cooling is provided for, higher compression pressures must be used.

The turbulence chamber is a recent development, not dating back to the early days of the Diesel engine. It is essentially an ante-

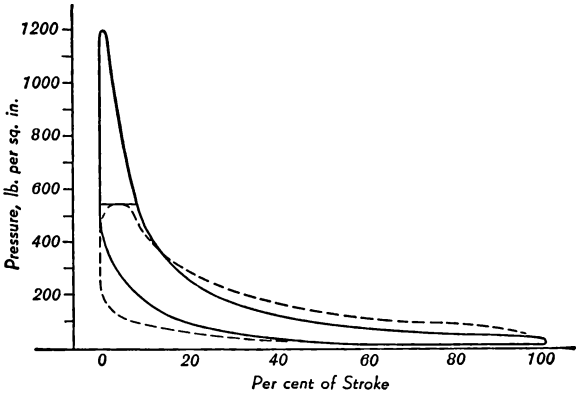

FIG. 154.—High vs. Low Compression Diesel.

chamber, but of a form which stimulates a whirling motion of the compressing air. As is well known, circumambulating air will readily absorb fuel droplets, providing the minute particles of fuel are injected so as to travel with the revolving air stream rather than against it. Thus a thorough mixing of the air and fuel is accomplished, which aids immensely in the rapid combustion of the fuel-air charge, and hence this type of construction may rightfully be named turbulence chamber rather than merely antechamber.

The compression ratios in vogue with this type of combustion chamber are of the order of 15 to 1 or even higher, which then assures auto ignition.

The fallacy of the high-compression Diesel engine is graphically shown in Fig. 154.

The Diesel engine with a compression ratio of 16: 1 reaches a maximum combustion pressure of 1200 lb. per sq. in. and an indicated-mean-effective-pressure of 120 lb. per sq. in. The low-compression Diesel with a compression ratio of but 12½: 1 reaches a maximum pressure of only 575 lb. per sq. in. with an indicated M.E.P. of 90 lb. per sq. in.

Thus we see that an increase of over 100 per cent in maximum pressure results in an increase of but 33⅓ per cent in indicated M.E.P. This, then, shows clearly that gain in M.E.P. must be sought by controlled combustion rather than by an excessive increase in working pressures. The strain upon the working parts of the engine, principally the bearings, is of such magnitude as to rule out attempts at excessive compression ratios.

But the compression is always made high enough to assure auto ignition; hence the insulating of the chamber can only be regarded as an additional precaution on the part of the designer to assure ignition of the fuel-air charge under any and all conditions. Since automotive engines are not provided with safety valves, ignition failure could be serious in that the subsequent compression may find some left-over fuel which, mixed with the incoming fuel, may form an over-rich mixture and cause detonation or worse. So in providing against such an occurrence, the designers are perhaps pardonably cautious.

Bolinder Turbulence Chamber. A very efficient form of turbulence chamber is that of the (Swedish) Bolinder Diesel engine. The chamber construction is shown in Fig. 155.

The chamber outlet is above the piston center; the fuel stream is directed towards the narrowest part of the passage connecting the chamber with the combustion space proper. The glow plug is located away from the flame propagation. The adjusting plug *A*, permitting a variation in the compression ratio, provides a hot surface and facilitates the removal of carbon which may form within the turbulence chamber. The location of the turbulence chamber, as chosen by Bolinder, is possible only in valveless 2-cycle engines, yet it is a desirable feature, keeping the flame away from the piston rings.

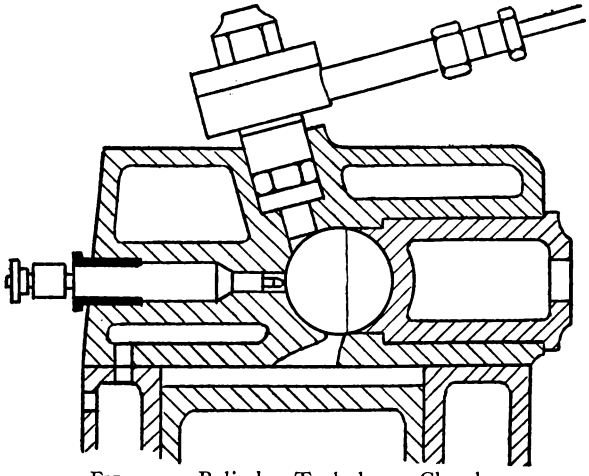

FIG. 155.—Bolinder Turbulence Chamber.

Hercules Turbulence Chamber. The design of the Hercules turbulence chamber is shown in Fig. 156. It will be noted that the turbo-chamber of Hercules design is at the side of the cylinder proper. The air whirling into this chamber meets the oncoming fuel sprayed from the injector. Combustion taking place, the expanding gases do not strike down upon the piston but rather glide over it. However, the piston overtravels part of the opening to the chamber near top-dead-center and a lip is provided in the center of the orifice to prevent the corner of the piston being burned at the beginning of the combustion.

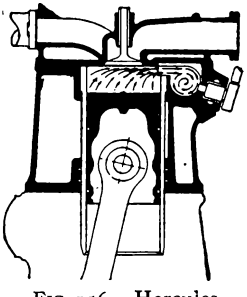

FIG. 156.—Hercules Turbulence Chamber.

Kaemper Turbulence Chamber. The Kaemper turbulence chamber, as shown in Fig. 157, differs from most turbo-chamber constructions in that the Kaemper design is not spherical but a horizontal cylinder of large diameter and of short length.

The whirl-chamber outlet is close to the center of the piston, the valves being offset to permit this. This in turn reduces the size of the valves, which may account for the fact that engine speeds in excess of 1800 r.p.m. have not yet been reached with this construction.

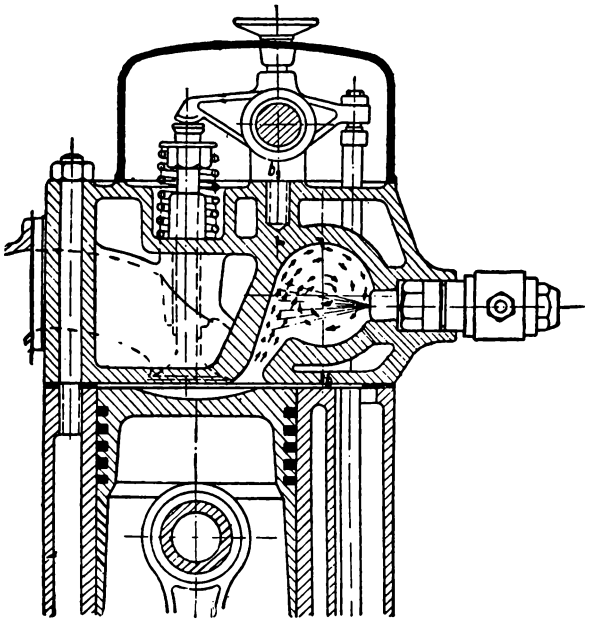

FIG. 157.—Kaemper Turbulence Chamber.

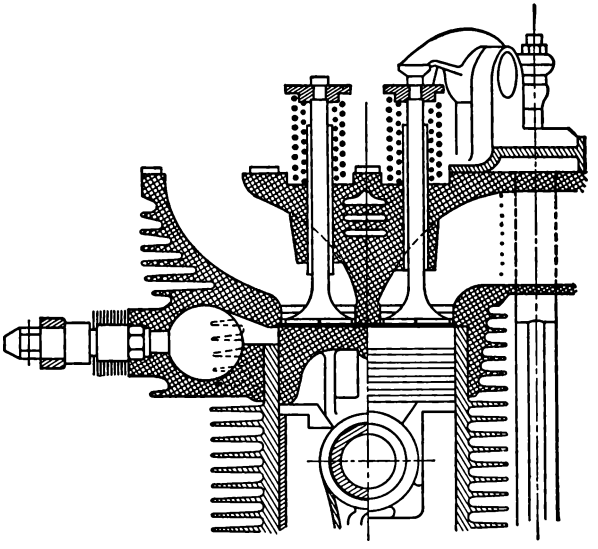

FIG. 158.—Lay Turbulence Chamber.

The mean-effective-pressures thus far obtained are of the order of 90 lb. per sq. in. The fuel consumption averages 0.44 lb. per b.hp. hr.

Lay Turbulence Chamber. The Lay turbulence chamber, as used in the Lay air-cooled Diesel engine, is shown in Fig. 158. As will be observed, the Lay turbulence chamber is not located in the head and over the piston, but at the side of the (air-cooled) cylinder proper. Its construction does not differ from the orthodox turbulence-chamber design, which is essentially a spherical chamber, connected by means of a port with the combustion chamber proper.

Its location, imbedded within the cooling fins of the cylinder, is perhaps a good choice insofar as air-cooled engines are concerned.

Oberhaensli Turbulence Chamber. The Oberhaensli turbo-chamber differs from the usual construction in that the chamber is not a complete sphere, as is customary with this type of chamber, but a ¾ sphere, as shown in Fig. 159.

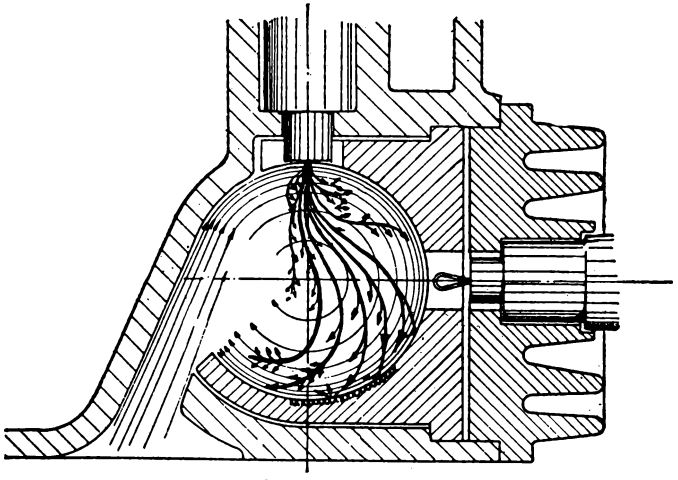

FIG. 159.—Oberhaensli Turbulence Chamber.

The inserted ¾ sphere is not made of steel or iron, as is customary, but of a highly refractory material giving a more rapid ignition because of the radiation of heat. The fuel injection is downwards towards the refractory cup.

Ricardo (Comet) Turbulence Chamber. The Ricardo or Comet type of turbulence chamber is shown in Fig. 160. This type of chamber is used in the Waukesha Comet Diesel engine.

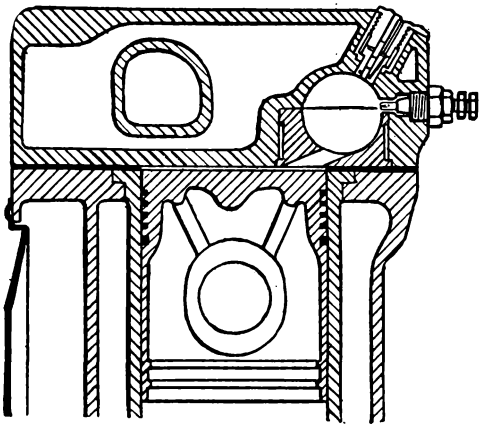

FIG. 160.—Ricardo (Comet) Turbulence Chamber.

The chamber is located in a side-pocket over the piston. During the compression stroke, the air whirls into this turbo-chamber, and while still in motion (before the piston has reached top-dead-center), fuel is injected, thus mingling intimately with the compressed air. The heat generated will furnish ignition, and the combustion of the fuel-air charge will leave the turbulence chamber and strike the piston, forcing the latter downward. While the compression ratio, and hence the compression temperature in most turbulence-chamber engines, is high enough to cause combustion, the vast majority of turbo-chamber designs feature an air-space insulated insert which undoubtedly acts as a hot head, retaining sufficient heat from the previous combustion to cause ignition. It is, of course, possible that designers favor this construction to make doubly certain that the engine will not miss at low speed and minimum load.

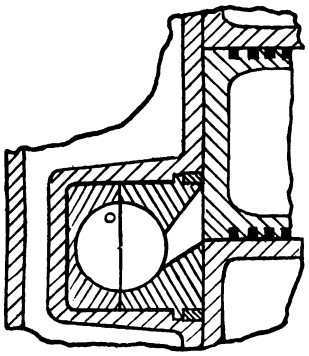

FIG. 161.—Ricardo Rotary Swirl Chamber.

In addition to the spherical turbulence chamber, Ricardo has patented a modified form of this type of combustion chamber known as the rotary-swirl type. The design is illustrated in Fig. 161.

In this design, the chamber is not of spherical shape, but rather cylindrical, the cylinder being so dimensioned that its length is at least two-thirds its diameter. The chamber connects with the combustion space proper through the usual passage. Fuel is injected in a direction parallel to the axis of the cylindrical chamber. The fuel thus does not travel with the circulating air stream, but meets the latter at right angles. For the sake of heat conservation, the swirl chamber proper is spaced away from the surrounding walls, being held by a small flange at the bottom and an abutment at the top, leaving a clearance at all other points.

Victor Cub Turbulence Chamber. The Victor Cub turbulence chamber is shown in Fig. 162. The fuel nozzle is placed so that

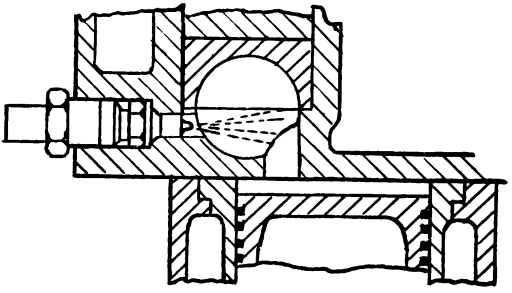

FIG. 162.—Victor Cub Turbulence Chamber.

the fuel injected by the nozzle will travel with the air-stream rather than collide with it. This design is of particular interest since it is used on an engine operating at 3000 r.p.m.

Turbulence chambers have been widely adopted for automotive Diesel engines, partly on account of the high r.p.m. such constructions permit, but mainly because low fuel consumption is obtainable with such chambers. In Fig. 163 the fuel consumption of a Ricardo turbulence chamber is given.

It will be noticed that the fuel consumption is directly proportional to the degree of turbulence attained, except at the maximum

range. Here the fuel consumption increases again, which can be accounted for by the decrease in volumetric efficiency due to the design of the intake system.

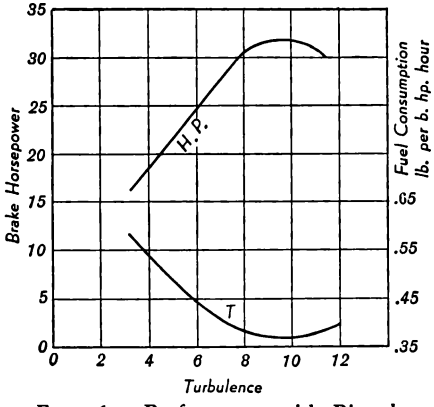

FIG. 163.—Performance with Ricardo Turbulence Chamber.

The position of the injector nozzle in turbulence chambers is usually such that the fuel-droplets meet the air as it revolves in a vertical plane. In general it may be said that the fuel particles should travel with the turbulent air rather than be forced to offer counter resistance to the circular motion of the air. Experiments have shown that more intimate mixing of fuel and air particles takes place when the two travel together and do not collide with one another or offer resistance to each other's flow.

AIR CHAMBERS

The fundamental requirements for the accepted designation of the Air Chamber Diesel engine make the following conditions essential:

(1) A dual compression space, the two chambers connected by a passage or orifice so that the air charge may pass from one to the other. One section of the compression space must face the piston; the other section may or may not have a direct outlet towards the piston.

(2) Fuel must be injected into the first compression space where most of the combustion takes place.

The air-chamber idea was first conceived by Diesel, but he never made use of it; perhaps he did not know how. Of course, in its modern application, the air chamber (so-called) is no longer a mere air chamber such as Diesel and some of his followers had in mind. Today, it is a dual combustion chamber, erroneously called air chamber.

Insofar as actual commercial practice is concerned, the air-chamber or energy-cell idea lay dormant for years. Then, some three decades after Diesel's original conception, a workable air chamber was evolved by injecting fuel in such a manner that combustion would commence simultaneously in the air chamber and in the combustion chamber proper. This, then, is in reality a dual combustion chamber engine, permitting, on account of its complete and instantaneous combustion, the development of really high-speed Diesel engines, engines of a maximum speed of 3000 r.p.m. and over.

The air-chamber types of construction which do not permit fuel to be burned within the air chamber are of course not dual combustion chamber engines. The air trapped within the chamber is, in a number of designs, not supposed to take part in the combustion, but is stored to perform extraneous duties which vary, according to the claims of the patentees.

The various types of air-chamber construction may be divided into three classes, namely:

(1) air chambers into which no fuel is intentionally directed, but into which fuel may or may not enter; in general, air chambers intended to aid combustion.
(2) air chambers, or rather energy chambers, into which fuel is purposely directed, so as to obtain a "blasting action" for mixing purposes or to obtain a dual combustion chamber.
(3) air chambers for other purposes; viz., to clean nozzles, to prevent overheating or the formation of carbon, etc.

In the first class belong the air-chamber constructions of Broquère, Cummins, Diesel, Ford, M.A.N., Mercedes-Benz, Ohlsson, etc.

The second class embraces the air-chamber constructions of Acro-Bosch, Kreutzer, M.W.M., Lang-Acro, Lanova, Perkins and others.

The third class includes such air-chamber constructions as those of van Amstel, Sulzer and many more.

These three classifications cover all of the air chambers now in use or proposed, but the classes (1) and (3) could be subdivided,

if anything were gained by doing so. Class (2), having a clear-cut purpose, permits no sub-divisions.

As to class (1), it may be said that if fuel does enter the air chamber—even if unintentionally—then such a chamber does aid in the combustion. But if, on account of the chamber's construction or its position relative to the fuel injection nozzle, no fuel ever enters the chamber, then combustion (within the combustion chamber proper) is not aided by such a chamber, but it is claimed to give smoother engine operation and more complete combustion.

All through this book, the author has presented the material in alphabetical order, but an exception should be made in the case of the air-chamber type Diesel engine. Here a chronological presentation seems better fitted to show the entire development since its inception.

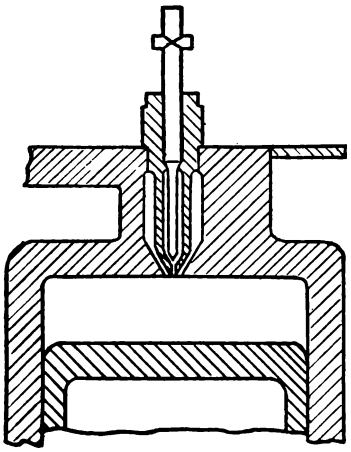

FIG. 164.—Diesel's Air Chamber Idea.

This type of construction goes back directly to Diesel, being part of his original patent of 1892. It is a construction never before thought of, whereas the open-chamber and ante-chamber constructions had been advocated in the pre-Diesel era. That Diesel's patent also covered an ante-chamber construction is of no moment here. Fig. 164 illustrates Diesel's conception of an air chamber.

FORD. Diesel never made use of the air chamber, and the entire idea of this construction lay dormant until 1915 when E. A. Ford obtained a patent, on an auxiliary chamber (air chamber) separated from the main combustion chamber by a constriction, the auxiliary chamber to contain air only (similar to Diesel's conception), and the fuel to be injected into the main chamber rather than into the auxiliary chamber. Fig. 165 shows Fords' air-chamber proposals.

The Ford patent was never reduced to commercial practice; in fact, even adequate tests were never made, yet the nomenclature used by him in his patent application has since been generally ap-

plied to any type of Diesel engine having an air chamber where the fuel is injected into the combustion chamber proper rather than into the air chamber, or, where the fuel is injected into both chambers.

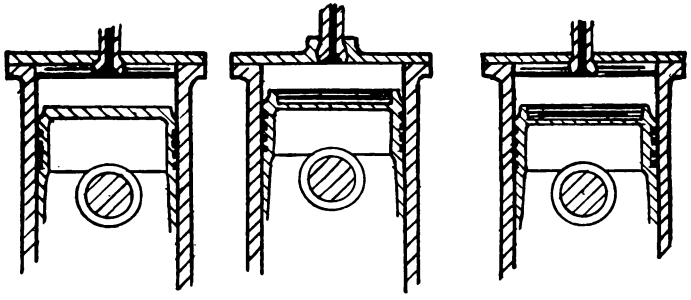

FIG. 165.—Ford's Air Chamber Designs.

In modern air-chamber Diesel engines, combustion takes place more or less simultaneously in both the combustion chamber proper and in the air chamber because fuel is injected into both chambers.

OHLSSON. Some years after Ford, in 1920, O. Ohlsson obtained an Austrian patent shown in Fig. 166. Among others, he made the following claims:

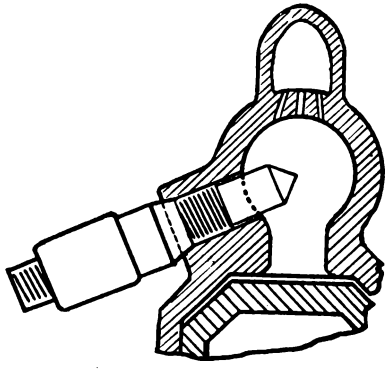

FIG. 166.—Ohlsson's Air Chamber.

". . . An antechamber with channels leading into an attached air chamber. . . . The attached chamber must remain absolutely free from fuel. . . . During combustion, the air streaming from this cell may partake in the combustion, but in the main, this air will after combustion drive the spent gases out of the ante-chamber. . . . In order that this may be realized completely, the channels are at divergent angles. . . ."

VAN AMSTEL. Another promulgator of the air-chamber idea was A. F. van Amstel, with his British patent of 1922. Van Amstel's air-chamber design is shown in Fig. 167.

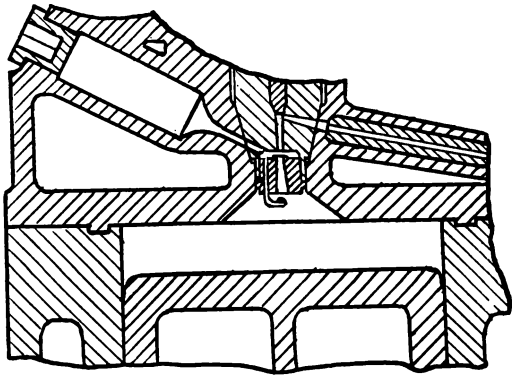

FIG. 167.—Van Amstel's Air Chamber.

Van Amstel claims the following for his air-cell design:

". . . The air emanating from the air chamber shall blow away the fuel droplets which may have adhered within or about the orifice connecting the nozzle outlet with the combustion chamber. . . . This air, on account of the cooled air chamber being of a lower temperature than that of the combustion chamber, shall prevent the overheating of the orifice leading into the combustion chamber proper, an event that shall take place during the entire expansion stroke and thus strengthen the same (the expansion), since the expanding cell-air flowing back into the compression space proper is of a lower temperature than the expanding air within the combustion chamber; finally the cell-air stream shall in conjunction with the orifice aid in the atomization of the fuel contained within the disc-shaped combustion chamber. . . ."

LANG. Franz Lang, the well known Diesel engine technician, developed in 1923 an air chamber Diesel engine which became known as the Acro. The arrangement of the air-cell is shown in Fig. 168.

In 1925, the firm of Robert Bosch purchased the Acro patents, and the air chamber arrangement became known as the Acro-Bosch.

BROQUÈRE. F. Broquère's air chamber (British) patent of 1925 is shown in Fig. 169. Broquère's air chamber is meant to contain all of the compressed air except that small portion which would occupy the clearance space between the piston and cylinder head.

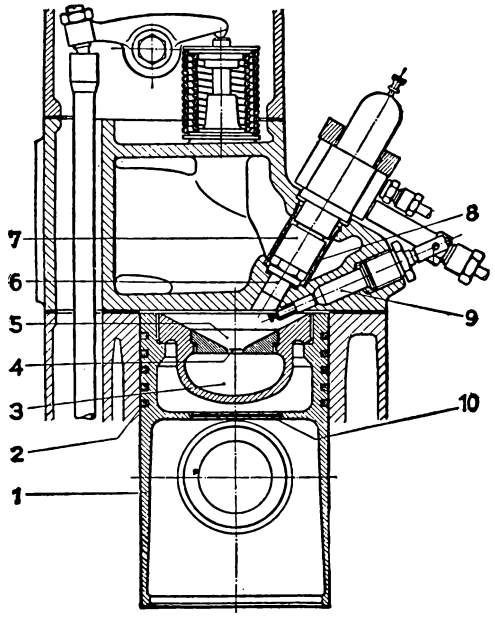

FIG. 168.—Lang-Acro Air Chamber.

Fuel is to be injected at the neck or passage connecting the air chamber with the cylinder. Only such quantity or quantities of fuel are to be injected as are needed for combustion, so that the air moving inward or outward within the neck may combine with the fuel in proper proportions in order to prevent a too instantaneous or too slow a flame propagation. But, having never been tried, this air chamber has yet to prove itself in actual practice.

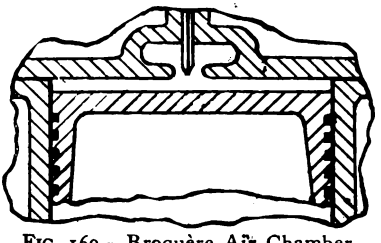

FIG. 169.—Broquère Air Chamber.

ACRO-BOSCH. Bosch's further development of the original Acro design is shown in Fig. 170. The location of the air chamber above the piston is far more advantageous than the old position of the piston-air-chamber, which caused undue heating of the piston. The glow plug is located in the main combustion chamber, near the tip of the nozzle.

KREUTZER. George Kreutzer patented in 1928 an air-chamber design. It is shown as used on an M.W.M. engine in Fig. 171. At

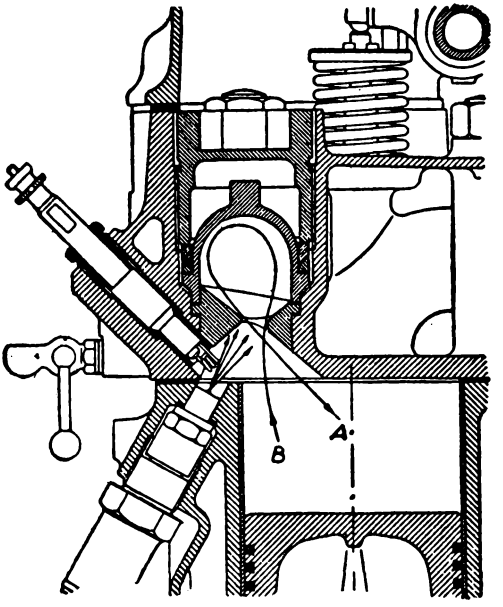

FIG. 170.—Acro-Bosch Air Chamber.

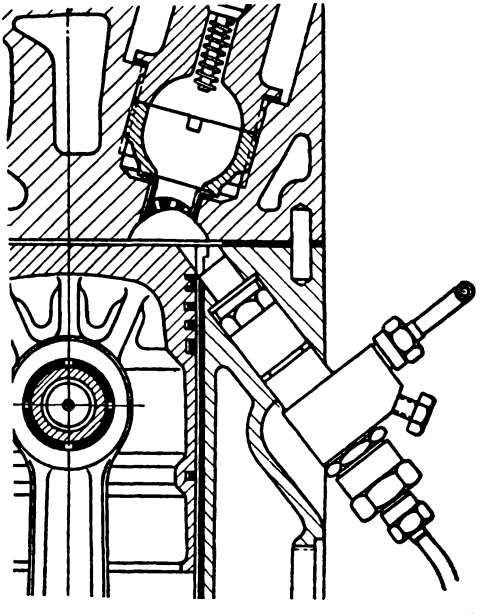

FIG. 171.—Kreutzer M.W.M. Air Chamber Design.

first sight, one is likely to classify this arrangement as a turbulence-chamber design. The compression space proper is located at one side of the piston. Kreutzer's design does not feature an open passage as most turbulence chamber designs do, but at the narrowest part of the orifice has a perforated disk. Fuel is injected against this perforated disk so that the flame propagation may take place in both the chamber as well as in the compression space proper.

The air chamber is extremely large, occupying about 60 per cent of the total available compression space. The perforated disk,

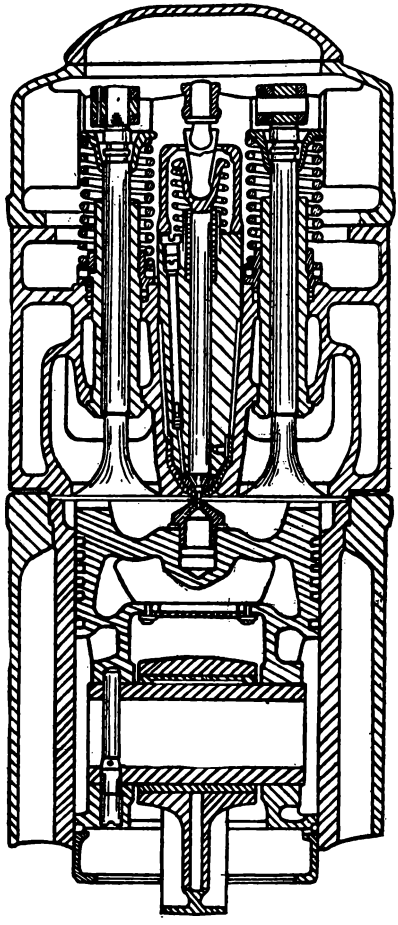

FIG. 172.—Cummins Air Chamber.

against which the fuel stream emanating from the nozzle, is directed, is made of a heat-retaining material known as Nichrotherm steel, which, due to its ability to retain heat, acts as a catalytic igniter. The compression pressure used is 500 lb. per sq. in. which would assure unfailing ignition without recourse to glow plates.

CUMMINS. The Cummins air chamber design is shown in Fig. 172 featuring a tiny air cell rather than an air chamber, located on top and in the center of the piston. Fuel is injected into the combustion chamber proper, not into the cell. The air cell represents from 5 to 10 per cent of the total combustion space and comes into action as the piston recedes during the expansion stroke. The rush of air emanating from the cell aids the combustion taking place within the main chamber; likewise it removes oil from the tip of the nozzle.

M.A.N. The M.A.N. air chamber is located below the conically tipped combustion chamber, the air is discharged from the three connecting jets during the downward motion of the piston, Fig. 173.

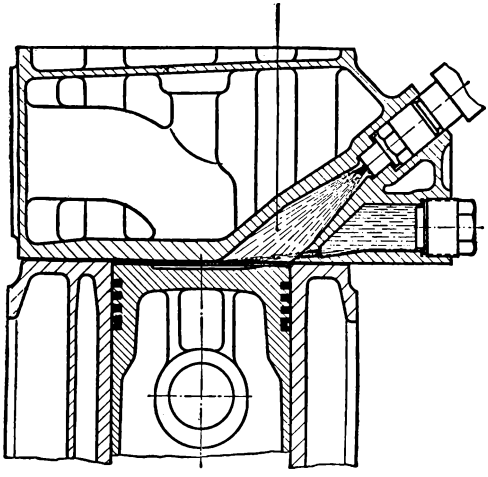

FIG. 173.—M.A.N. Air Chamber.

It is claimed that this flow of air aids in producing complete combustion at maximum loads with clear exhaust. The location of the combustion chamber permits the use of large valves. It is standard construction (1938) for all German military Diesels.

MERCEDES-BENZ. Daimler-Mercedes-Benz, having for years presented an antechamber design, described in the chapter dealing with Antechambers, are now constructing an air chamber design known as the "double cell," Fig. 174.

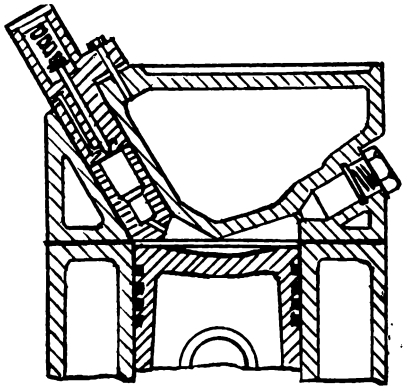

FIG. 174.—Mercedes-Benz Air Chamber.

As will be seen, the combustion chamber proper consists of the clearance space bounded by the V-type cylinder head and the concave piston head. The air chamber located over one side of the piston connects through a narrow orifice with the combustion chamber proper. Fuel is injected into the latter through a small antechamber, and the air stored within the air chamber can only come into action as the piston descends, since no fuel is injected into the air chamber.

LANOVA. The Lanova air chamber of Lang's design, is shown in Fig. 175. In reality, the combustion chamber and the air chamber constitute a dual combustion chamber. The two are connected by a small orifice and fuel is injected in a stream that penetrates the combustion chamber proper and enters the air chamber through the orifice, which is in a straight line with the fuel nozzle. Combustion takes place in both chambers practically simultaneously, while the discharge from the air chamber creates such a turbulence that the fuel is consumed with but little delay. Easy starting may be obtained with the Lanova design without the glow plug by using a manually controlled plug valve that will close the opening between the minor and major air chambers thus raising the compression pressure for starting. This chamber design is used by a number of American manufacturers; it is widely used abroad, especially for automotive Diesel engines.

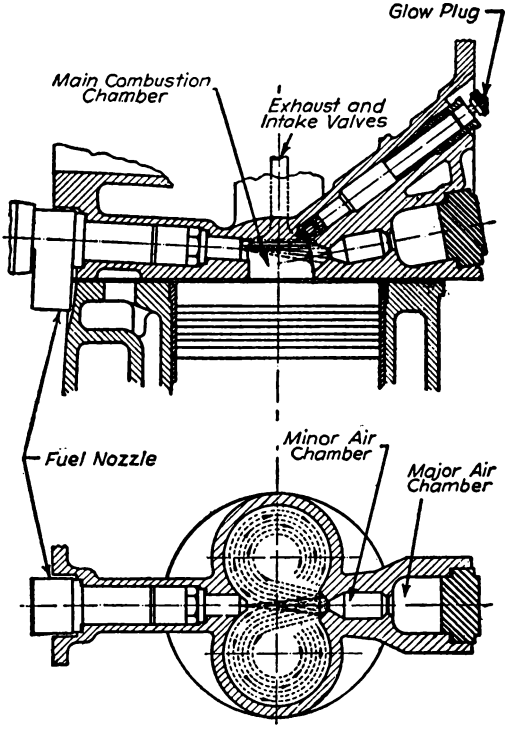

FIG. 175.—Lanova Air Chamber Design.

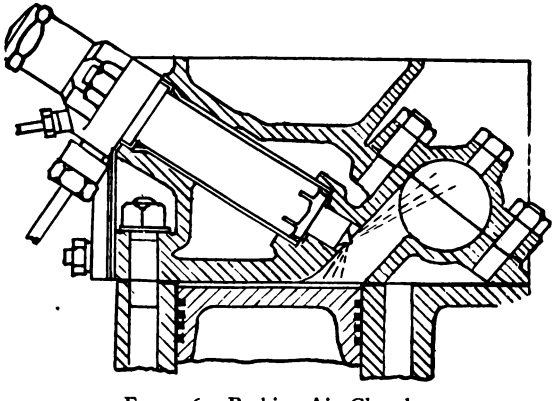

FIG. 176.—Perkins Air Chamber.

PERKINS. At first sight, one is apt to classify the Perkins so-called "Aeroflow" combustion chamber as a turbulence chamber. See Fig. 176. Whereas most air-chamber constructions do not impart a whirling motion to the compressing air, the Perkins scheme does. Fuel is injected into the rather large neck so that combustion may take place in both the air chamber and in the combustion chamber proper simultaneously. It is an interesting variation from standard practice and is being used on small engines running at speeds up to 3000 r.p.m.

CONCLUSIONS

Thus, as has already been stated, if classification of air chambers is based strictly upon performance, disregarding all unsubstantiated claims, it will fall into but three groups; i.e., those

(1) aiding combustion,
(2) partaking in the combustion,
(3) for extraneous purposes.

Aiding the combustion is a step in the right direction; using the air chamber as an additional combustion chamber has proved its merits, though it is not quite clear just why an additional combustion chamber should be called an air chamber energy cell.

COMPARISONS OF CHAMBER DESIGNS

Having reviewed the open-, ante-, turbulence- and air-chamber designs of Diesel engine combustion chamber construction, one is apt to be bewildered by the almost endless variety of features.

To keep one's head in this maze, one must, above all, bear in mind that what may be sound practice for slow-speed heavy-duty Diesel engines—for stationary or marine use—is not necessarily suitable for high-speed automotive engines, a service demanding the acme of flexibility. Automotive service is unquestionably hardest to meet adequately, and acceleration is a paramount factor. All of the four designs mentioned are being used today to a greater or less extent in automotive service with varied degrees of success.

The two fundamental requirements that modern automotive

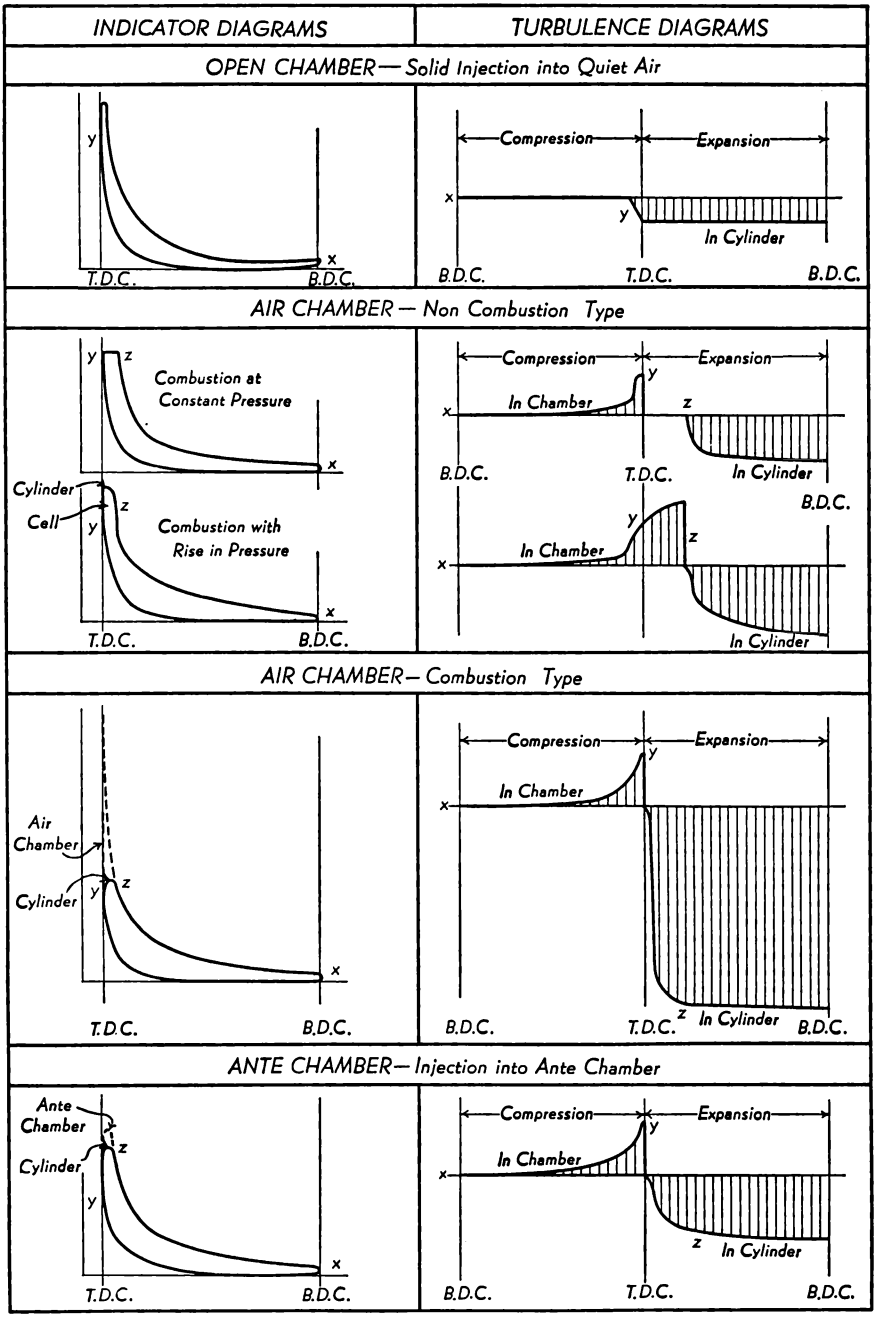

FIG. 177.—Chamber Comparisons.

Diesel engines must meet in order to receive consideration as prime movers are:

First, ability to render high-speed performance, up to 3600 r.p.m. at the least. While the engines described in the chapter dealing with Automobile Diesel Engines do not quite meet this demand, it is safe to assume that at least some of them could be further developed so as to reach this goal.

Second, smooth rhythm of operation. The fulfillment of this demand would rule out all designs which demand excessive compression ratios, and which, on account of this, are subject to rough and jerky operation.

Practically all of the ante-, turbulence-, and air chamber designs are protected by Letters Patent, and Diesel engine builders may be unwilling to pay royalties. Many a constructor, after years of futile effort, has given up his own chamber design and acquired a license for some successful patented construction. Of course, it must be admitted that the success of automotive Diesel engines is not necessarily dependent upon any one chamber design, though some are totally unsuitable.

Combustion Chamber Types. Open-chamber Diesel engines, with fuel injection taking place directly into the combustion chamber, require far higher compression pressures than air chamber

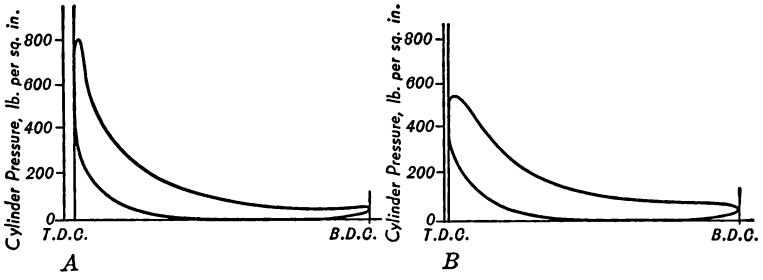

FIG. 178.—Cylinder Pressure Open (*A*) vs. Air Chamber (*B*).

Diesels. Figure 178 gives comparisons of *A* the open-chamber, and *B* the air chamber type.

In low-speed Diesel engines, the maximum cylinder pressure is rarely much more than twice the compression pressure, but in high-

speed operation of open-combustion-chamber engines, the maximum pressure may reach three or even four times the compression pressure. Too high compression pressures and hence high combustion pressures should be avoided for automotive service if smoothness of operation is desired.

The combustion taking place in modern air chambers, which in reality are but dual combustion chambers, is subjected to an influence arising out of their dimensional proportions. Too small an air chamber can have but a negative influence upon the total combustion taking place within the combustion chamber proper and the air chamber, whereas too large an air chamber (too large in proportion to the main combustion chamber) delays the total combustion.

Figure 179 shows an indicator diagram of an engine having a

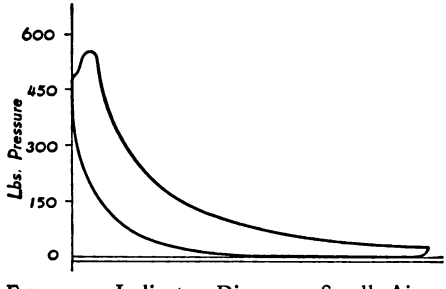

FIG. 179.—Indicator Diagram, Small Air Chamber.

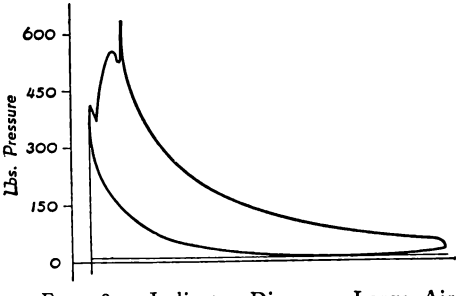

FIG. 180.—Indicator Diagram, Large Air Chamber.

rather small air chamber. Figure 180 illustrates the effect of an air chamber of too generous proportions; the effect is a delayed combustion. While the indicator card shows "corpulence," a very desirable feature, it is obtained at the cost of delayed combustion, which makes high engine speeds impossible and gives rise to a smoky exhaust. The air chamber design demands careful determination of chamber sizes and proportions.

It may be of interest to state that at least one concern approached the Diesel engine chamber design with an open mind and made exhaustive tests to establish which one of the four designs would give the best results. Henschel made a series of tests with the various combustion chambers coming within the category of the four designs enumerated above, and the results are illustrated in Fig. 182.

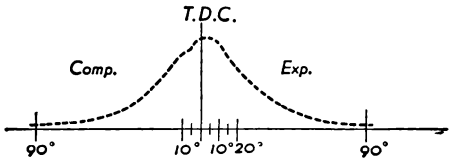

375 R.P.M. (Idling Speed)
Peak pressure 380 lb. per sq. in.
Mean eff. pressure 40 lb. per sq. in.
Fuel consumption 1.56 lb. per b. hp. hr.

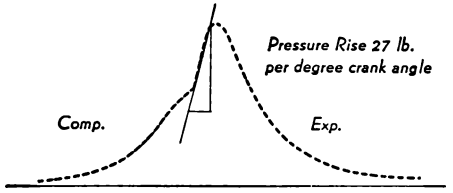

700 R.P.M.
Peak pressure 675 lb. per sq. in.
Mean eff. pressure 114.5 lb. per sq. in.
Fuel consumption .450 lb. per b. hp. hr.

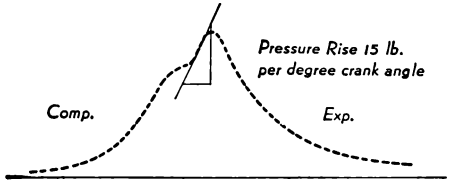

1200 R.P.M.
Peak pressure 610 lb. per sq. in.
Mean eff. pressure 114.5 lb. per sq. in.
Fuel consumption .450 lb. per b. hp. hr.

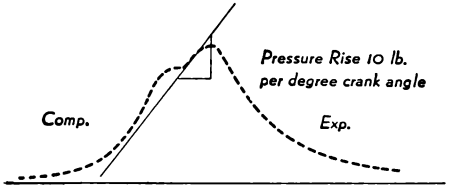

1800 R.P.M.
Peak pressure 580 lb. per sq. in.
Mean eff. pressure 105 lb. per sq. in.
Fuel consumption .455 lb. per b. hp. hr.

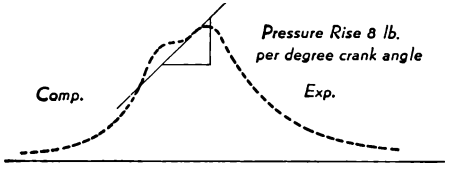

2000 R.P.M.
Peak pressure 570 lb. per sq. in.
Mean eff. pressure 102 lb. per sq. in.
Fuel consumption .455 lb. per b. hp. hr.

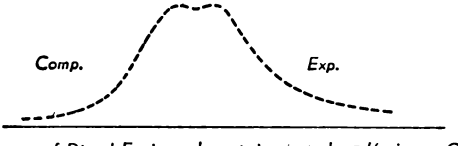

2200 R.P.M.
Peak pressure 510 lb. per sq. in.
Mean eff. pressure 87.5 lb. per sq. in.
Fuel consumption .490 lb. per b. hp. hr.

Performance of Diesel Engine — bore 4 in. — stroke 3 1/2 in. — Comp. Pressure 340 lb. per sq. in.

FIG. 181.—Performance, Diesel Air Chamber Engine.

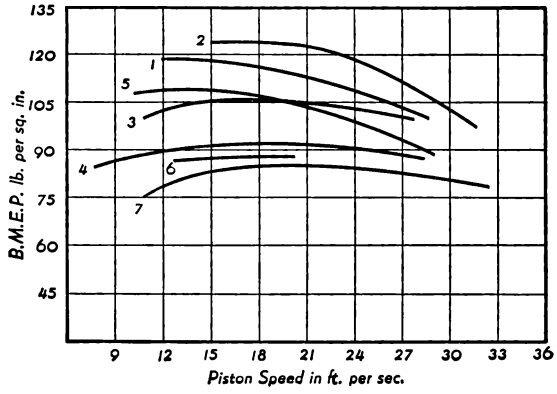

1. Air chamber.
2. Air chamber.
3. Open chamber.
4. Antechamber.
5. Antechamber.
6. Antechamber.
7. Trubo chamber.

FIG. 182.—Henschel's Tests of Various Chamber Designs.

The engine used was of the 6-cylinder type, 4.92 in. bore and 6.3 in. stroke. The compression ratios varied from 12½ to 1 for the air chamber design up to 17 to 1 for open-type chamber design.

ODD CHAMBER DESIGNS

The valve-in-head design is practically standard in the Diesel engine field insofar as 4-cycle engines are concerned. The L-head type, so common in gasoline engine practice, is unsuitable for Diesel engines because of the difficulty of reducing the compression space to workable proportions.

In order to obtain a compression ratio of 15 to 1 or better—which most engines seem to require—a bore-stroke ratio of 1 : 1¾ or at least of 1 : 1½ is necessary in order to obtain sufficiently high compressions in L-head engines. For high-speed engines, a bore-stroke of 1 : 1¼ or thereabouts permits a high crankshaft speed, yet does not call for unduly high piston speed, whereas a long stroke usually limits the crankshaft speed because of lack of adequate piston lubrication and other factors.

Inasmuch as in an L-head design intake and exhaust valves are in a side-by-side arrangement within a pocket they definitely limit the minimum space allowable for a compression chamber, various de-

signers have tried to overcome this handicap. An interesting design is that of Bielefeld, shown in Figs. 183 and 184.

BIELEFELD. The Bielefeld engine has a bore stroke ratio of 1 : 1.33; the L-head follows standard gasoline engine practice insofar as the side-by-side valve arrangement is concerned. But in the head of the valve pocket, directly above the valves, Bielefeld places a dual piston, actuated by rocker arms, the piston to increase the com-

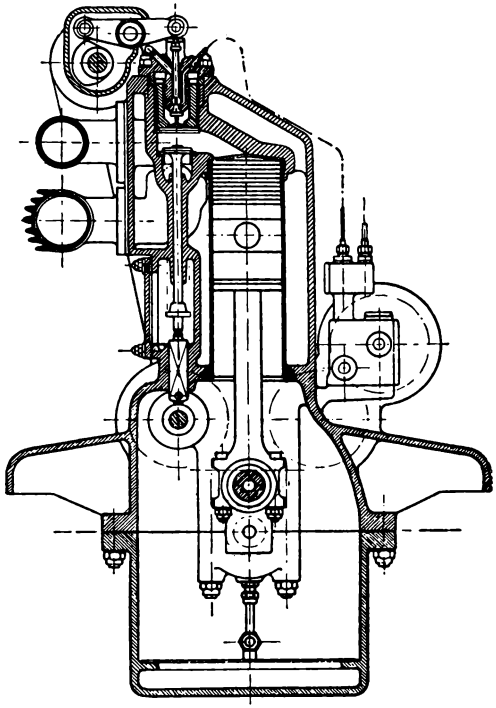

FIG. 183.—Bielefeld Chamber Design.

pression pressure by being forced down into the valve pocket, barely clearing the valves.

The construction of the Bielefeld dual piston is shown in Fig. 184. The fuel lifts the nozzle pin off its seat; when the fuel injection begins, a rocker arm forces the compressor piston down towards the valves, reducing the compression space, and thus, in turn, raising the compression pressure.

This design is interesting if nothing else. The extra work re-

quired, the extra camshaft needed for actuating the compressor pistons, in addition to the camshaft needed for operating the intake and exhaust valves, adds so many complications that the simple usual form of an open- or antechamber construction with overhead valves would seem to represent a far better arrangement.

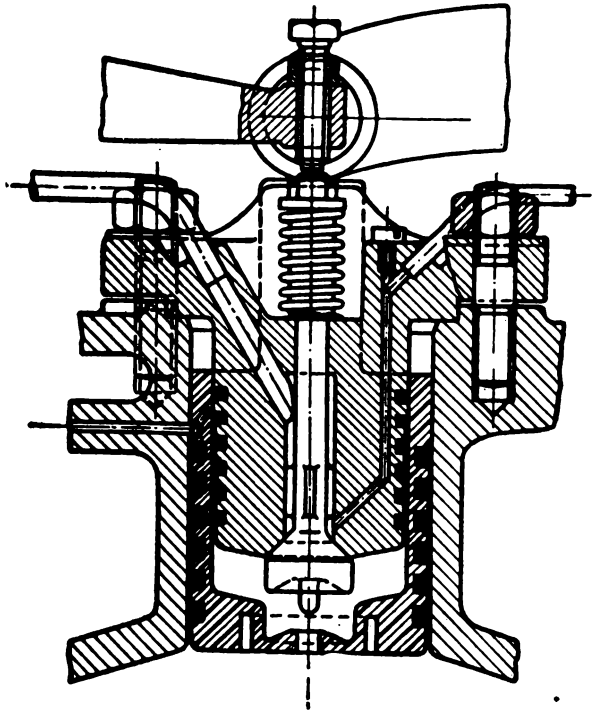

FIG. 184.—Bielefeld Dual Compressor Piston.

CLIMAX. The combustion chamber of the Austrian Climax Motor Co. is shown in Fig. 185. It is essentially a side pocket containing a "hot bulb," which acts as a catalytic igniter. While the bulb proper is also an air cell, the design cannot be classified as belonging to the air-chamber variety of combustion chambers.

SEILIGER. An elaborate scheme of chamber design is that of M. Seiliger of Paris, shown in Fig. 186. The Seiliger scheme embraces a Diesel engine featuring both an open chamber and a so-called air chamber. According to Seiliger, his chamber arrangement possesses the following good points:

(1) 100 per cent utilization of the compressed air charge.
(2) The very maximum of brake-mean-effective-pressure.
(3) No oxygen surplus needed.

Seiliger reasons that, while fuel-droplet combustion takes place within pure air, the very combustion releases spent gases (exhaust gases), which in turn prevent other fuel droplets from reaching pure air, thus making complete combustion difficult and slow.

Seiliger intends to force air into the combustion chamber in step with the fuel injected by the nozzle so that each fuel droplet may find its oxygen molecule. This in turn is supposed to permit complete combustion and would obviate any surplus of air (few Diesel engines utilize more than 70 per cent of the compressed air). Seiliger plans to force the air into the combustion chamber by means of a piston similar to Bielefeld's arrangement. If Seiliger's scheme ever is put into actual practice, it will be interesting indeed to analyze indicator diagrams taken of such an engine.

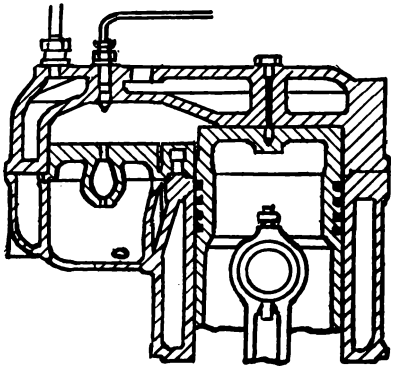

FIG. 185.—Climax Combustion Chamber.

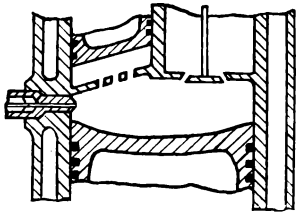

FIG. 186.—Seiliger Compressor Chamber.

RICARDO. Those who must have an L-head Diesel engine or insist upon combustion taking place in a side pocket, can realize this effect by using a modified form of the so-called Ricardo head, as shown in Fig. 187.

The intake valve is placed in a recess within the flat part of the cylinder head. This location of the intake valve tends to cause turbulence of the incoming air. The location of the exhaust valve only in the side pocket permits smallest possible pocket dimensions, and so makes compression ratios of 15 to 1 or 16 to 1 feasible in an engine with a bore-stroke ratio of not less than 1 : 1.33.

The same effect is obtained in the Mono-valve engine, which has

a combustion chamber of the same shape as the Ricardo design but the valve in the cylinder head is omitted, the same valve being used for intake and exhaust in the L-head construction. This is possible when used with a special type of manifold, which insures a full supply of fresh air for the intake.

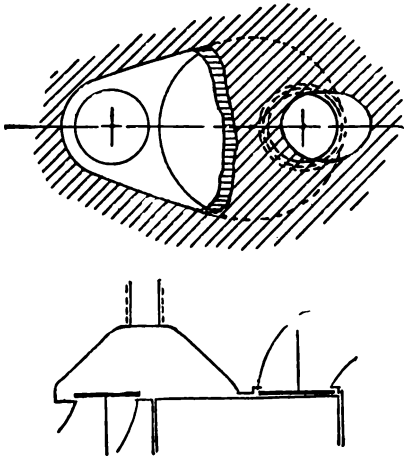

FIG. 187.—Modified Ricardo Head.

VARIABLE CHAMBERS

Variable compression pressures are sometimes desirable, primarily in order that the engine may be able to operate with different grades of oil. While for the time being, vegetable oils have not been used for Diesel engine operation, they undoubtedly will be in the not too distant future, especially in those sections of the world where natural oil is non-existent and vegetation super-abundant. As is well known, the flash point of aromatic oils is far higher

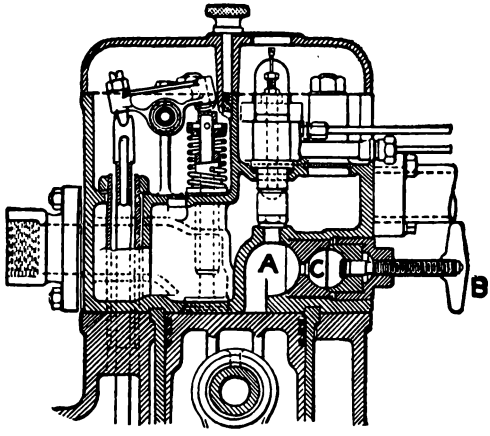

FIG. 188.—Lister Variable Chamber.

than that of paraffinic oils; hence the former require higher compression temperatures, which can be realized only by raising the compres-

sion ratio. This variation might be obtained with the plug valve construction spoken of for the Lanova air cell construction. Another type of construction that might be used for various oils as well as for starting is described below. This type was proposed by Lister.

LISTER. The Lister variable chamber is essentially a turbulence chamber with an adjacent air chamber, as shown in Fig. 188.

The fuel is injected into the turbulence chamber, the air chamber being rather inactive except that it reduces the compression pressure. For starting, the air-chamber passage between the air chamber *C* and the turbulence chamber *A* can be closed by means of the screw plunger *B*, which then increases the compression to 600 lb. per sq. in., thus raising the temperature of the compressed air far beyond the ignition point. When the engine has warmed up, the screw plunger can be loosened so that the air chamber may be open. This, then, reduces the compression pressure to but 400 lb. per sq. in., sufficient to keep a warmed-up engine going.

If this dual-chamber scheme and screw-plunger combination is used only for starting purposes, it seems that this could be accomplished far more readily with simple glow plugs. If, however, the designer wishes to have an engine adaptable to various kinds of fuel then this construction is sound, providing the engine is built heavy enough to withstand high compression pressures continuously.

And then, too, totally different fuels require pumps and nozzles designed for the efficient handling of such fuels. On the whole it seems that the standard practice of increasing or decreasing the compression space by means of interchangeable bushings is preferable, and while this change is being made, different pumps and nozzles could be installed simultaneously.

CHAPTER 10

AUTOMOTIVE DIESEL ENGINES

The credit for the first attempt to produce a Diesel-engined automobile must go to the Société St. Georgen of France, which, aided by the late Dr. Diesel, built such an automobile in 1910. Daimler-Mercédès began experimenting in 1912, Saurer in 1914, and Tartrais in 1921, and all of them faced almost insurmountable difficulties.

The first successful automobile Diesel engine was developed by the M.A.N. during the years 1922 to 1924. The engine was of the 4-cylinder, 4-cycle type, developing 40–45 b.hp. at 900 r.p.m. Its weight was 990 lbs. This engine is shown in Fig. 189.

The first Diesel-engined truck roamed through the streets of Germany in 1923. A M.A.N. Diesel, similar to the one shown in

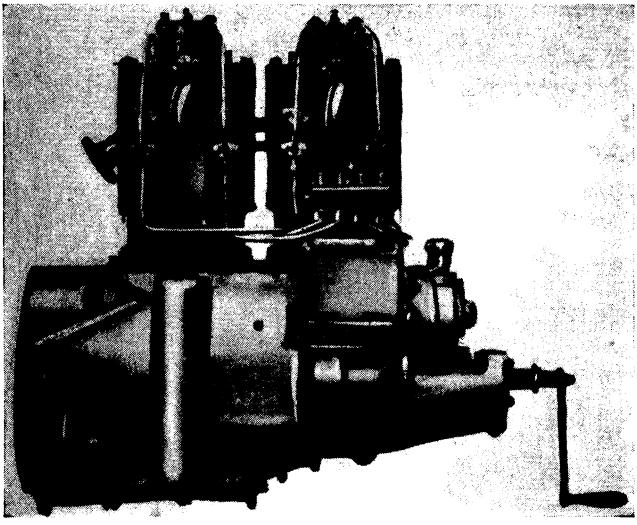

FIG. 189.—M.A.N. Automobile Diesel Engine.

Fig. 189, but changed over by Lang to the Acro-Bosch air chamber system, furnished the power for a truck in 1926, Fig. 190.

The first Diesel-powered truck appeared in Britain in 1927, and several Mercédès-Benz Diesel-powered trucks were sold in Britain in 1929 and are still in operation. With the perfection of suitable fuel injection pumps and nozzles came the development of automotive Diesel engines for trucks and buses the world over, and passenger cars powered with Diesel engines began to appear in Europe. Die-

FIG. 190.—Early "Heavy Duty" Diesel Engine Truck. (In the foreground, l. to r., Dr. Bosch, Franz Lang.)

sel motor boat engines are in wide demand and Diesel aircraft engines have made their debut.

A.E.C. The Associated Equipment Company's Diesel engine is of the Ricardo turbulence chamber design. The A.E.C. Diesel, Fig. 191, is of the 6-cylinder type, bore 4.13 in., stroke 5.12 in. and thus of approximately 411 cu. in. displacement, developing 100 b.hp.

The 6 cylinders and the upper crankcase of the engine are cast en-bloc. The fuel pump is driven by a long shaft from the timing gears. The generator, water pump, and fan are driven by a dual V belt off the crankshaft. The lower crankcase and the flywheel hous-

ing are of cast aluminum. The engine is started by glow plugs until warmed up. The A. E. C. engine, as designed, is intended for automotive use; its weight complete is 1145 lbs. This engine is typical of modern British design.

In addition to the engine shown in Fig. 191 the A.E.C. also manufactures a larger engine of 4.53 in. bore and 5.59 in. stroke. This engine is also of the 6-cylinder type, and of 525 cu. in. displacement. A cut-away view is shown in Fig. 192.

The performance of this engine is shown in Fig. 193, the maximum power delivered at 2200 r.p.m. being 135 b.hp.

ARMSTRONG-SAURER (Britain). The British firm of Armstrong manufactures a vehicle Diesel engine after the design of the

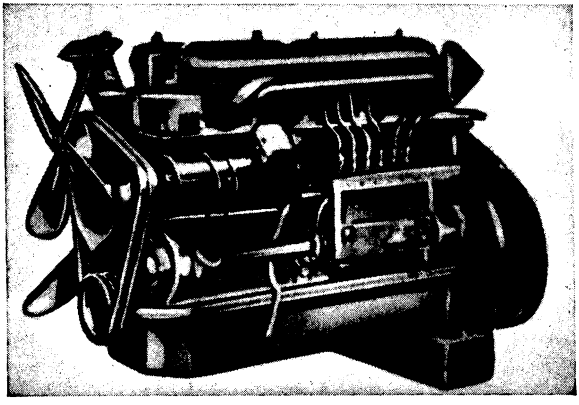

FIG. 191.—A.E.C. Diesel Engine.

Schweizerische Lastwagenfabrik Saurer. The engine is of the open turbulence chamber injection type with dual injectors.

The Armstrong-Saurer engine is of the 6-cylinder vertical type, 3.15 in. bore. 4.73 in. stroke, with a displacement of 220 cu. in. The engine is of the most modern design; a single Silumin casting comprises cylinder block and crankcase. The cylinder block is equipped with renewable cast iron liners. The cylinder head and pistons are of aluminum. Saurer type fuel pump and single hole injectors are used; the fuel pump is equipped with a hydraulic governor and a corrector for altitude. This governor regulates the fuel according to speed as well as load. The engine delivers 72 b.hp. at 3000 r.p.m. and weighs 684 lb. complete.

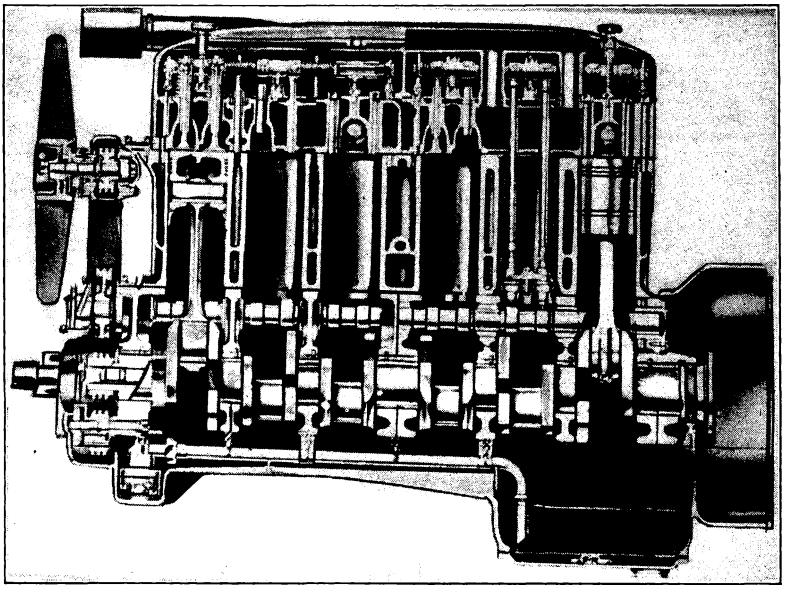

FIG. 192.—Cross Section A.E.C. Diesel Engine.

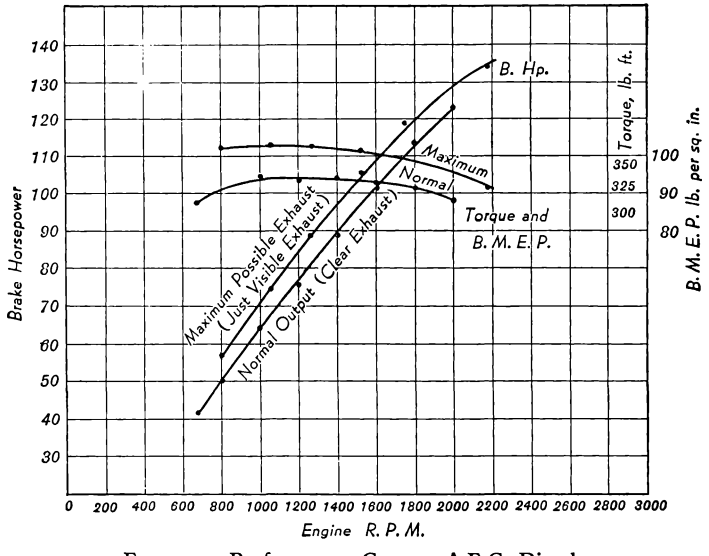

FIG. 193.—Performance Curves, A.E.C. Diesel.

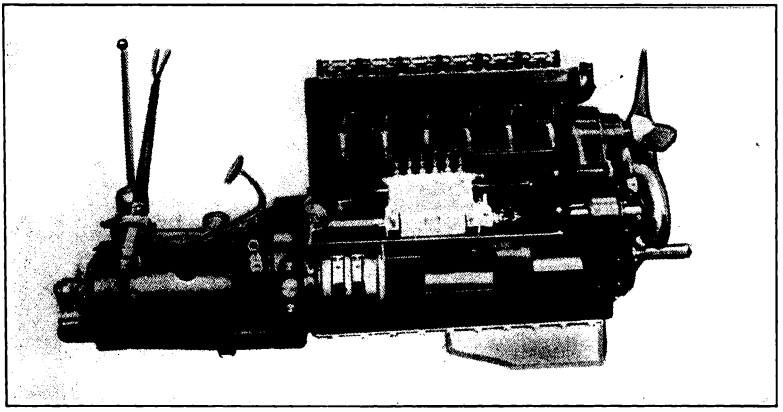

FIG. 194.—Armstrong-Saurer Engine.

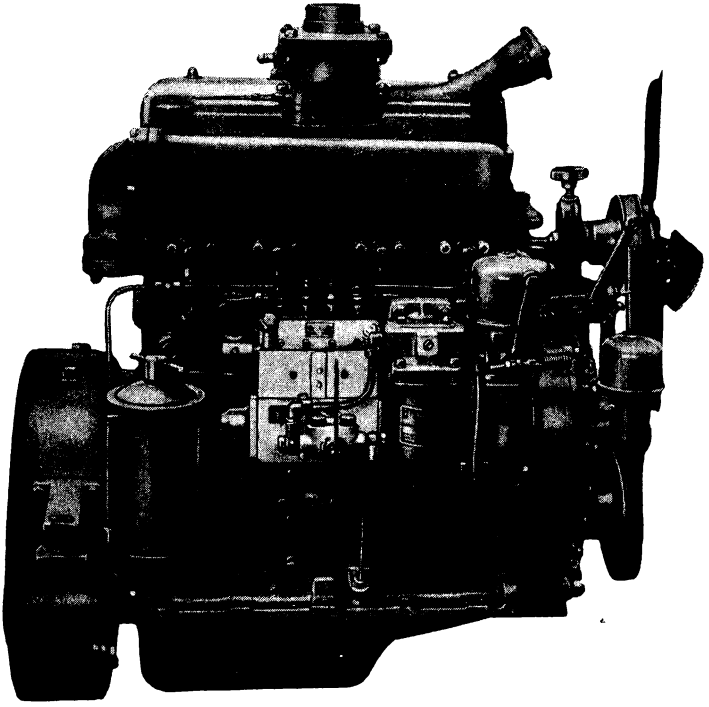

(Courtesy of the Buda Company)

FIG. 195.—Buda-Lanova Diesel Engine. Automotive Type, Model 4-DT-186. Four Cylinders, Four Cycle; Full Diesel, Light Weight, High Speed.

In addition to the 6-cylinder engine, Armstrong also manufactures a 4-cylinder type of 4.13 in. bore and 5.12 in. stroke, and hence of a displacement of 274 cu. in. The engine delivers 72 b.hp. at 2000 r.p.m.

BUDA. The Buda Co. manufactures Diesel engines employing the air chamber construction of the Lanova system and another line using the M.A.N. open chamber construction.

The Buda model 4D-186, Fig. 195, is a Diesel engine intended

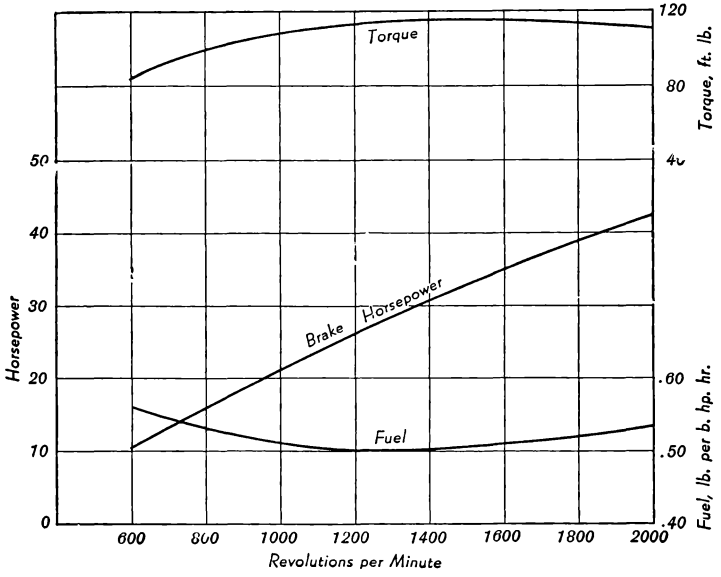

FIG. 196.—Power Chart of Buda Diesel, 4D-186.

Engine Model 4D-186. 4 cylinders; bore, 3⅝ in.; stroke, 4½ in.; displacement, 186 cu. in.; maximum speed continuous load, 1700 r.p.m.; maximum speed intermittent load, 2000 r.p.m. Fuel, Diesel oil. Fuel pump, Excello; Bosch nozzles; Timing 23° B.T.D.C.

for automotive use. It is of the 4-cylinder type, 3⅝ in. bore and 4½ in. stroke, and of 186 cu. in. displacement.

The engine construction embodies typically automotive practices with the Lanova air chamber. The fuel consumption is given as 0.5 lb. per b.hp. hour, which is rather high for Diesel engines.

In addition to this 4-cylinder type, the Buda Company produces other 4- and 6-cylinder types up to 6½-in. bore by 8¾-in. stroke for automotive, industrial power and marine service.

BUESSING-N.A.G. (Germany). The Buessing-N.A.G. produces Diesel engines of from 3 to 6 cylinders, 45 to 175 b.hp. A very unusual Diesel engine is the 5-cylinder 80 b.hp. type of this firm, shown in Fig. 198.

The Buessing-N.A.G. Diesel engines embody the Koerting-Sartorius antechamber construction, which is described in the chapter dealing with Antechambers.

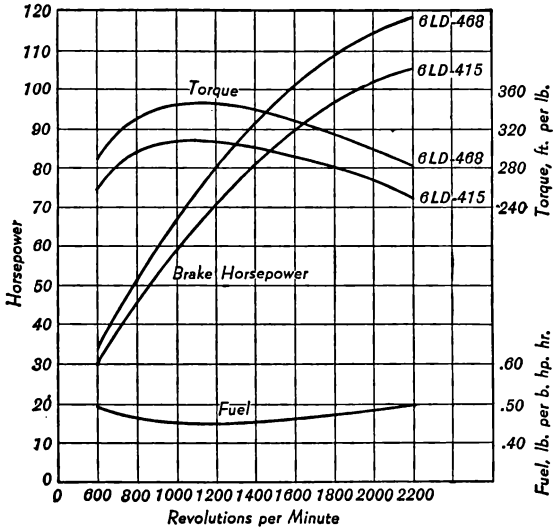

FIG. 197.—Performance of Buda 6-Cylinder Diesels.

Automotive Models	6LD-415	6LD-468
Cylinders	6	6
Bore	4 in.	4¼ in.
Stroke	5½ in.	5½ in.
Displacement	415 cu. in.	468 cu. in.

Maximum speed continuous load, 2000 r.p.m.
Maximum speed intermittent load, 2200 r.p.m.
Fuel, Diesel oil.

In order to obtain overlapping power impulses, it has been customary to use at least 6 cylinders for 4-cycle engines. Buessing-N.A.G., however, secure a continuous flow of power with the very minimum of cylinders, and it is said that their 5-cylinder engine operates with all the smoothness of a 6-cylinder engine. The crank throws are set 72° apart, which secures power impulses 144° apart. The fuel pump used is a special 5-plunger type, with short piping to the injector nozzles.

CATERPILLAR. One of the most popular Diesel engines in the United States is that built by the Caterpillar Tractor Company. All of their Diesel engines use their own type of ante chamber, a single-hole nozzle and their own make of fuel pump. All models are used either on tractors or for industrial power units.

In Fig. 199 is shown the Caterpillar Diesel engine D-4400.

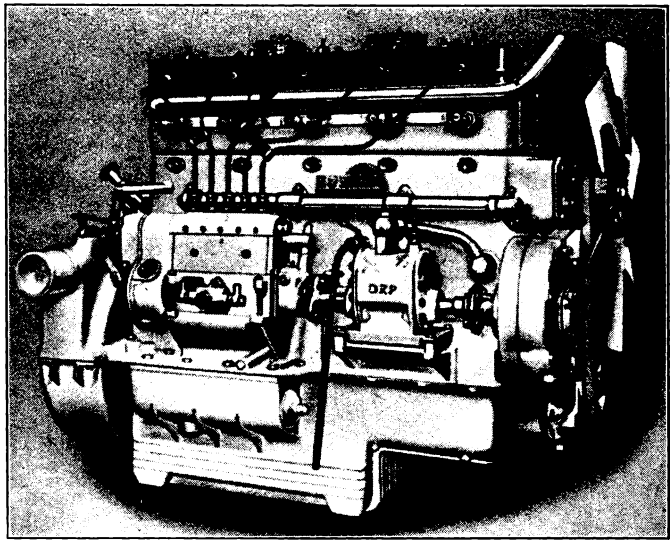

FIG. 198.—Buessing N.A.G. 5-Cylinder 80 b.hp. Diesel.

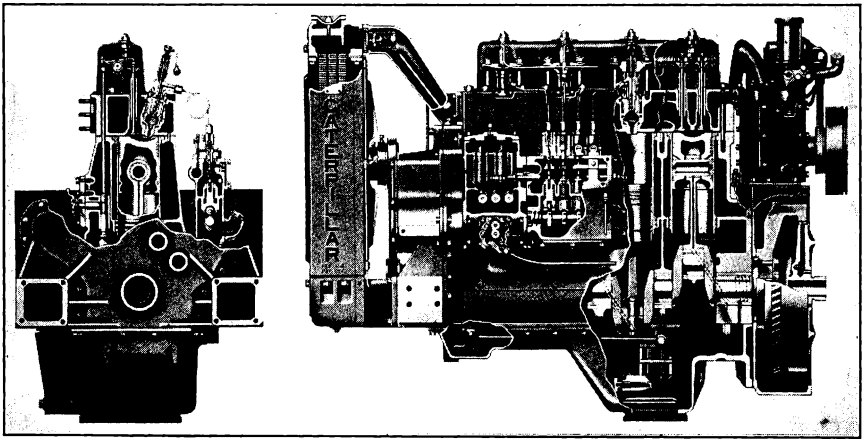

FIG. 199.—Caterpillar D-4400 Diesel Engine.

This is the smallest model, of four cylinders, having 4¼-in. bore and 5½-in. stroke. It develops a maximum b.hp. of 46.5 at 1600 r.p.m. with a maximum b.m.e.p. of 87 lb. per sq. in. at 950 r.p.m.

All models have an integral cylinder block and crankcase of cast iron with wet sleeve cylinder liners. The removable cylinder head is also of cast iron. The pistons are aluminum alloy.

All other models of Caterpillar Diesel engines are 5¾-in. bore and 8-in. stroke. They build this size in 3, 4 and 6 cylinders in line, and a V-8-cylinder. This latter engine is shown in Fig. 200.

As will be seen from Fig. 201, this engine develops 180 b.hp. at 1000 r.p.m. with a maximum b.m.e.p. of 93 lb. per sq. in. at 650 r.p.m. The b.m.e.p. curve is exceptionally flat throughout the speed range of the engine. This engine is governed to a maximum speed of 850 r.p.m.

Caterpillar Diesel engines are started by small two-cylinder gasoline engines, which are shown in Figs. 199 and 200, mounted over the flywheel.

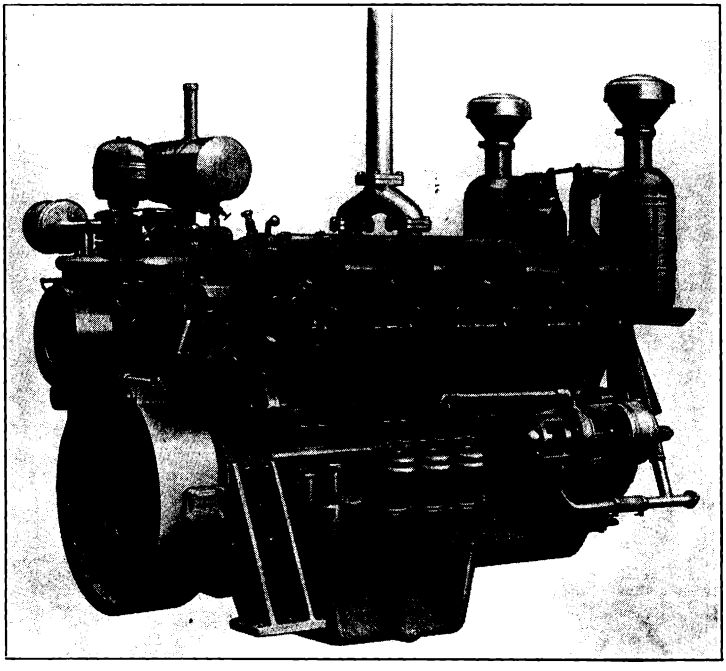

FIG. 200.—Caterpillar D-17000 Diesel Engine.

CUMMINS. The Cummins Engine Co. of Columbus, Indiana, manufactures several types of high-speed Diesel engines. The latest addition to the Cummins line is the Model AA-6 of 3¾-in. bore and 5-in. stroke. The total displacement is 331 cu. in. and the engine delivers 85 b.hp. at 2200 r.p.m. The engine weighs 1200 lb.

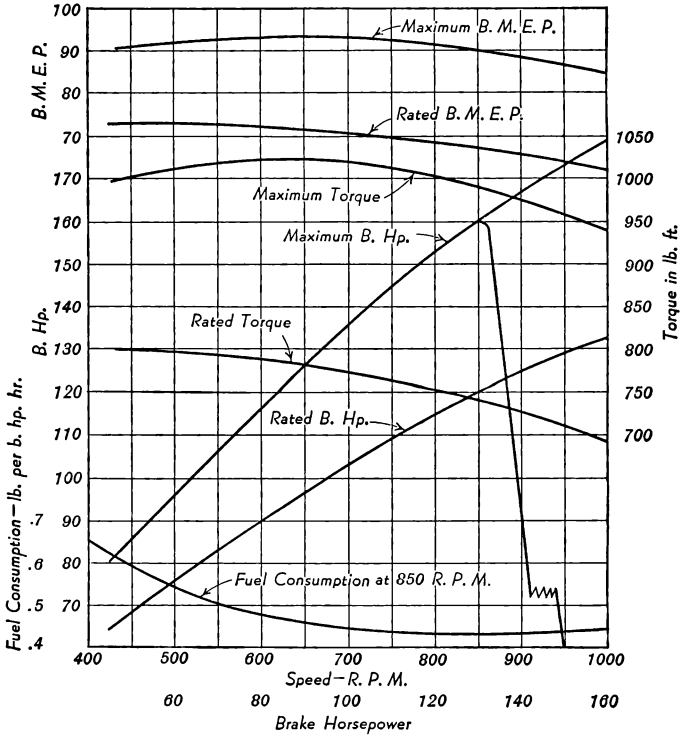

FIG. 201.—D-17000 Characteristic Curves.

The maximum torque of the Cummins AA-6 is 235 ft. lb. and the minimum fuel consumption of 0.49 lb. per b.hp. hour.

The larger HA-4 and HA-6 engines are of 4⅞-in. bore and 6-in. stroke, delivering respectively 83 b.hp. and 125 b.hp. at 1800 r.p.m.

All Cummins engines feature a distributor injection system as is shown in Fig. 106.

The crown of the piston (Fig. 172) is shaped to create turbulent motion, and the high outer rim of the piston prevents fuel from

being blown against the cylinder walls. The small air cell in the center of the piston directly below the injector is placed in such a way that the air liberated from this cell during the combustion period assists in breaking up any rich mixture that may surround the atomizer tip. The lower side of the piston just above the wrist pin is protected by a baffle, which prevents the splashing oil from cooling the piston head and the air-cell. It is essential that a high tempera-

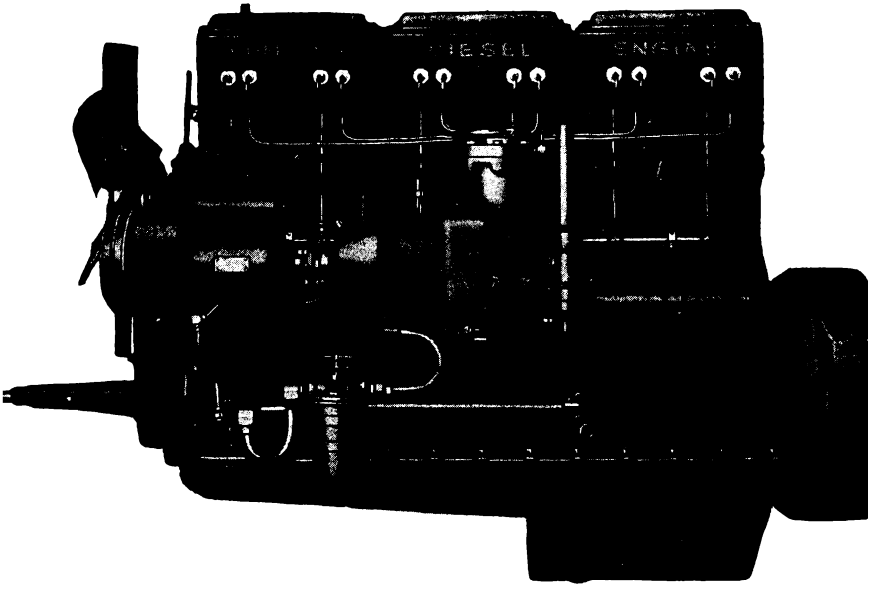

FIG. 202.—Cummins Model HB-600 Diesel Engine.

ture be maintained at the air-cell, as this will aid combustion and prevent missing.

The Cummins automotive Diesel engine is one of the first American Diesel engines especially developed for automobile and marine use. It has been widely adapted, principally in the truck field as well as the industrial and the marine fields.

DEUTSCHE WERKE (Germany). The Deutsche Werke Diesel engine employs an air-chamber type head (Lanova Patents). The engine is of the 8-cylinder, double-opposed type, each row having 4 cylinders, Fig. 204. The engine develops 180 b.hp. at 1500 r.p.m.

The engine is of compact design; the 8 cylinders and the crank-

case are cast en-bloc, but in such a manner that the crankshaft can readily be withdrawn. Tie-rods hold the crankshaft bearings so as to relieve the cylinder casting from strains. Two 4-cylinder Bosch fuel pumps supply the injectors with fuel. The fuel consumption is given as 44 lb. per b.hp. hour. The engine is started by a 15-b.hp.

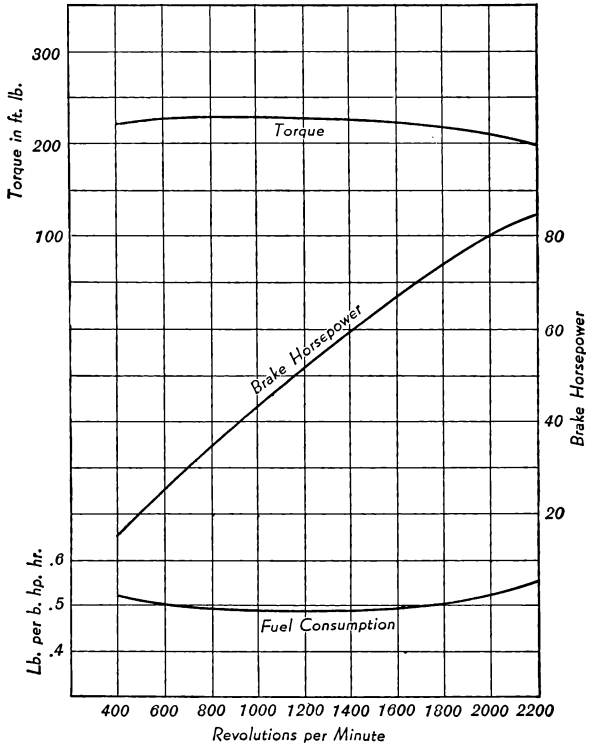

FIG. 203.—Characteristic Curves of Cummins AA-6 Diesel Engine.

24-volt Bosch starting motor, and a 24-volt Bosch generator is standard equipment.

HERCULES. The Hercules Motors Corporation is building several turbo-chamber Diesel engines for automotive use. A sectional view of the engine is shown in Fig. 206. This is a section of the largest size Hercules Diesel, which has the cylinder block cast separate from the crankcase. All of the smaller engines have integrally cast cylinders and crankcase.

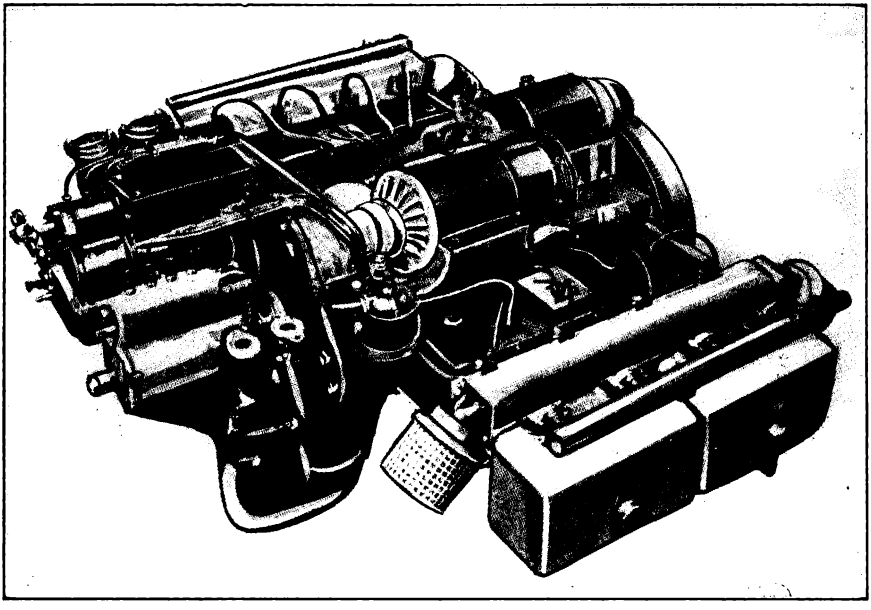

FIG. 204.—Deutsche Werke Diesel Engine.
Showing the accessibility of the horizontal double opposed (pancake type of engine).

Until recently these engines used wet cylinder sleeves. However, the Hercules turbulence chamber construction caused the sleeve joint to come so low that it was impossible to adequately cool the upper portion of the sleeve. As a result, they are now using dry sleeves as shown, except on the smallest size, which has no sleeves.

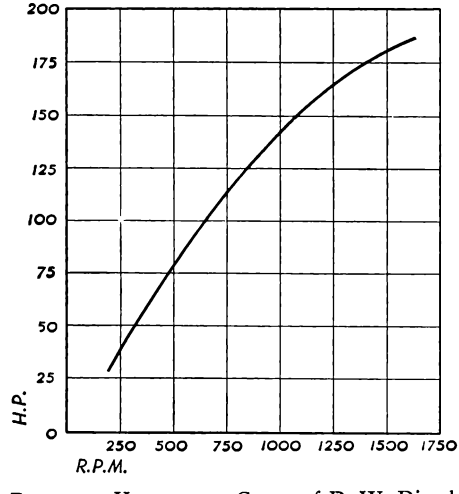

FIG. 205.—Horsepower Curve of D. W. Diesel Engine.

The type DJX is a high-speed, typically automotive Diesel engine of 6-cylinder construction with a bore of either $3\frac{1}{2}$ or $3\frac{11}{16}$ in. and a stroke of $4\frac{1}{2}$ in.

As may be seen from the

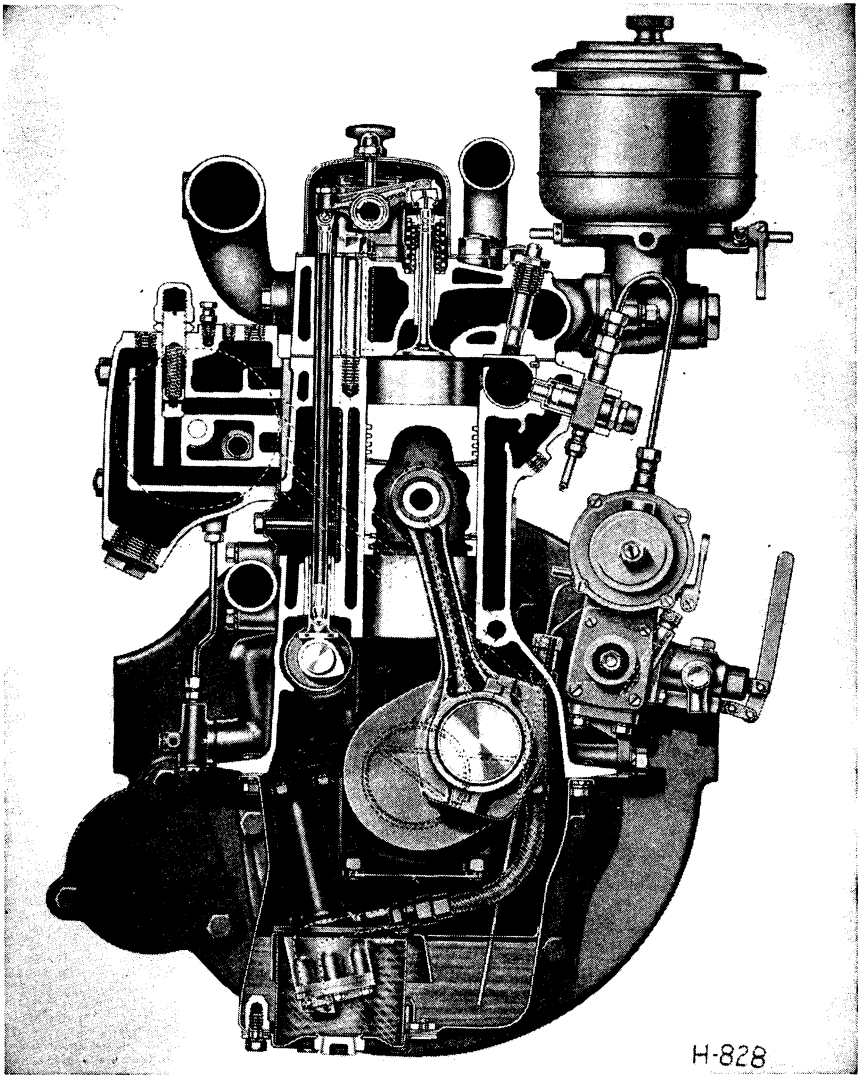

Courtesy of Hercules Motor Corporation.

FIG. 206.—Hercules "DJX" Series 6-Cylinder Diesel Engine.

power chart, Fig. 207, the Hercules DJX Diesel engines are of the high-speed type, 2600 r.p.m., which is quite a feat for turbulence-chamber engines. The low speed, 600 r.p.m., is rather high and should be reduced considerably. The fuel pump used is a Bosch and the injector nozzles are of the pintle type.

In addition to the DJX series, the Hercules Corporation also

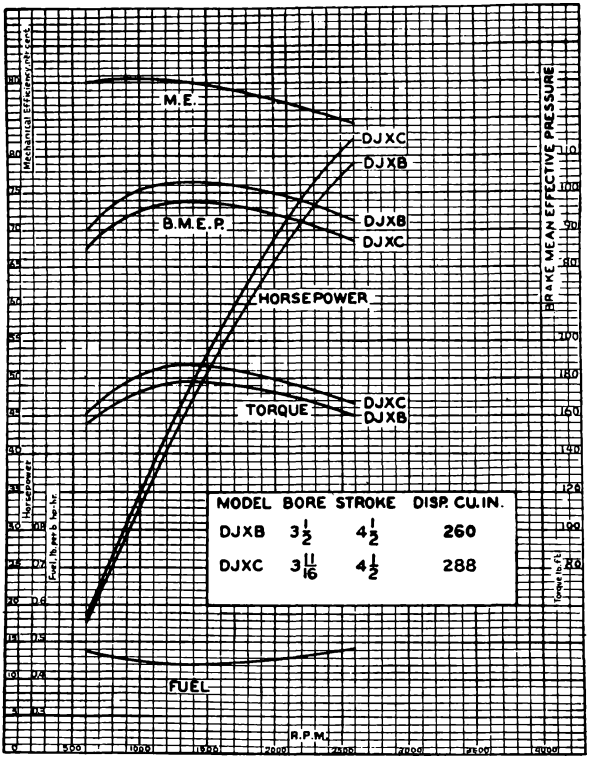

FIG. 207.—Characteristic Curves, Hercules DJX Diesels.

manufactures larger bus-type engines, the largest being the Model DHXB, Fig. 206.

This engine is also of the 6-cylinder type with a bore of 5 in. and a stroke of 6 in. The maximum speed of this engine is 1800 r.p.m., at which speed it develops 176 b.hp. The b.m.e.p. is exceptionally high, being 113 lb. per sq. in. at 1300 r.p.m., while the minimum

fuel consumption under full power is 0.38 lb. per b.hp. hr. at 1000 r.p.m.

This engine is intended primarily for large trucks and buses. The performance of this engine is shown in Fig. 208.

INTERNATIONAL HARVESTER. The Diesel engine manufactured by the International Harvester Company for tractors and in-

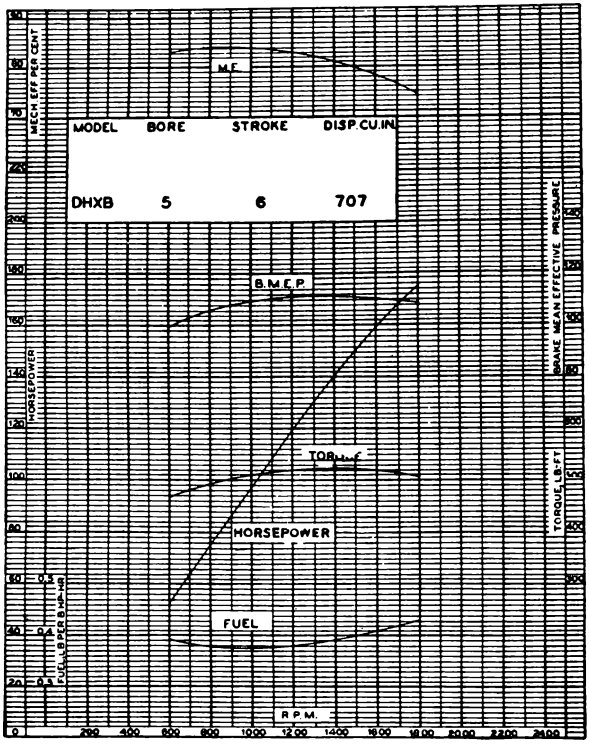

FIG. 208.—Characteristic Curves, Hercules DHXB Diesel.

dustrial power is shown in Fig. 209. This engine uses a conventional antechamber mounted at a slight angle to the cylinder axis.

The injection nozzle is different from the type most generally used. A very fine filter is located in the top of the nozzle assembly, from which the oil passes down to the injection valve. This valve is spring loaded, but opens toward the antechamber. The oil passes through a single hole nozzle plate before entering the antechamber.

The injection pump is controlled by a by-pass valve, which is operated from a rocker arm. This rocker arm is mounted on an eccentric *A*, which is oscillated either by hand or by the governor to control the end point of injection.

This engine is equipped with a carburetor and magneto to per-

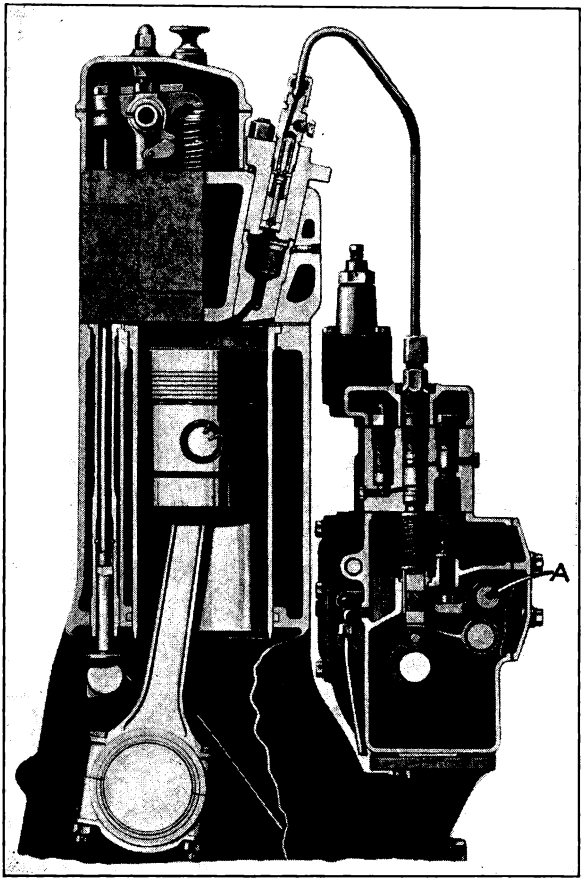

FIG. 209.—International Harvester Diesel.

mit starting and warming up on gasoline before operation as a Diesel. To operate as a gasoline engine, the compression ratio is lowered by the handle *A* (Fig. 210), which opens the valve *B*, thereby increasing the compression space. Valve *C* is also raised so as to cause the incoming air to pass through the carburetor. After the

engine has run on gasoline for a given time, these valves automatically return to the positions shown and the engine operates as a Diesel.

JUNKERS. The opposed-piston type engine is shown in Fig. 211. Numerous manufacturers in various countries have obtained licenses to construct this type of engine covered by the Junkers patents.

Contrary to popular belief, the Junkers type is not "new," but

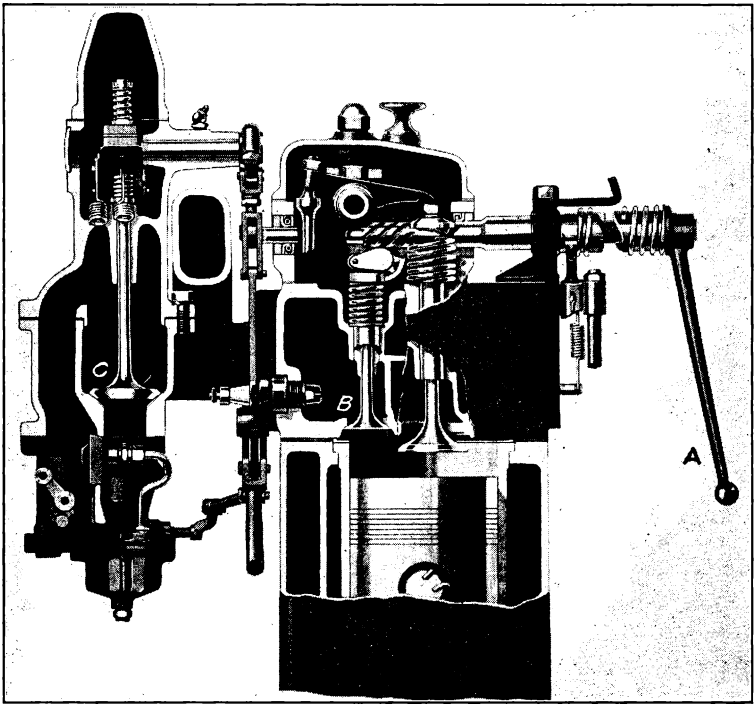

FIG. 210.—International Harvester Starting Control.

merely a resurrection from the dim past. During the late nineties, automobiles were powered with single and twin cylinder opposed-piston type engines, a type then known as the "balanced" engine.

Junkers automotive Diesel engines are made in four sizes: 2, 3, and 4 cylinders with a 3.35-in. bore and 9.45-in. stroke, developing 60, 90 and 120 b.hp. respectively at 1500 r.p.m., and a 4-cylinder with 3.94-in. bore and 9.45 in. stroke, which develops 165 b.hp. at

1500 r.p.m. The b.m.e.p. of this last engine is 189.5 lb. per sq. in. and the maximum torque is 599 lb. at 1000 r.p.m.

The compression ratio of all Junkers engines is 17 to 1. Exhaust ports open 15 deg. ahead of intake ports, but both ports close simultaneously. Intake ports are located at upper piston, exhaust ports at lower piston.

The scavenging air is supplied by a compressor whose displace-

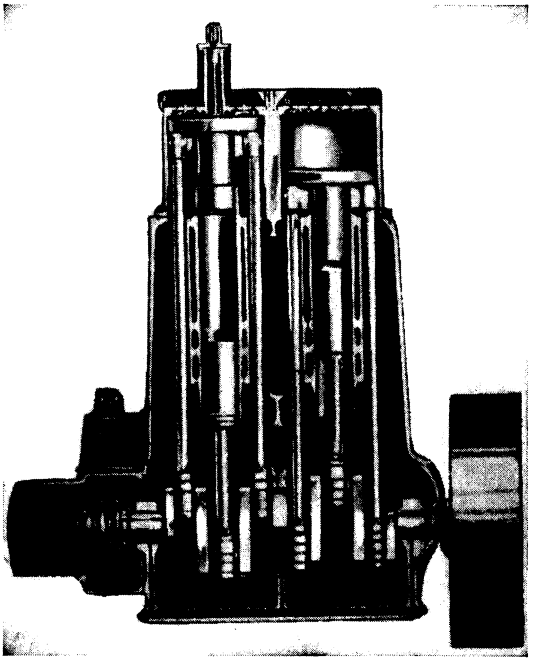

FIG. 211.—Junkers Diesel Engine.

ment is more than double that of the engine cylinders. The actual volume produced by the compressor is approximately 160 per cent of the cylinder volume. The losses of some 40 per cent are due partly to the adiabatic compression, and to leakage in the compressor.

The fuel is injected at a maximum pressure of 10,500 lb. per sq. in., which may account for the unusually complete diffusion of the fuel in the turbulent compressing air.

The Junkers Diesel is one of the most unusual Diesel engines in use. In spite of its high compression ratio, it is very smooth in operation.

The rotary motion of the air charge causes the flame of the injected fuel to "blow" through the entire combustion space.

KRUPP. A novel Diesel engine for automobile use is the 4-cylinder opposed engine of the Krupp Works, as shown in Fig. 214. The engine is air cooled with the blower mounted in front of the

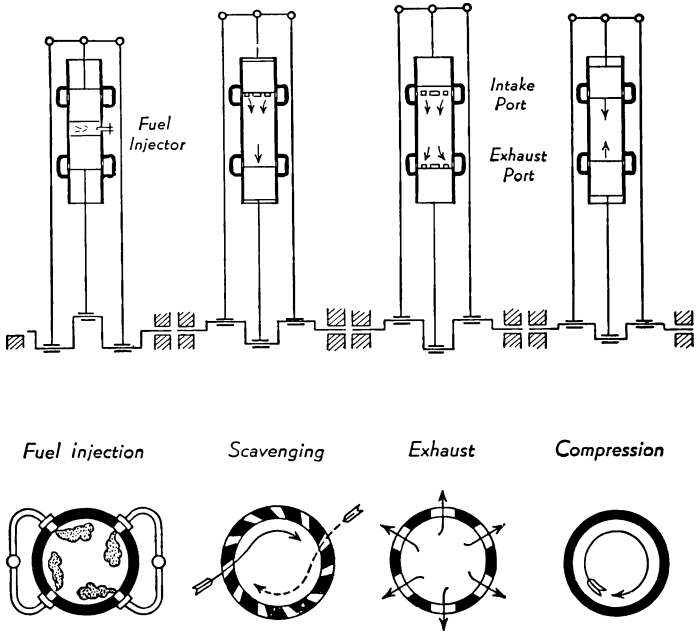

FIG. 212.—Diagram of 4-Cylinder Junkers Engine.

engine block furnishing the air blast. The engine has a 3.62-in. bore and 5.12-in. stroke, giving a piston displacement of 210 cu. in. The combustion chamber used is of the open type, consisting mainly of a piston cutaway. The compression pressure is 570 lb. obtained with a compression ratio of 17 to 1. The b.m.e.p. is 80 lb. per sq. in. The fuel consumption is 0.44 lb. per b.hp. hr. The maximum power developed at 2350 r.p.m. is 50 b.hp. This engine is also built in a V-8 with 307 cu. in. displacement and develops 95 b.hp.

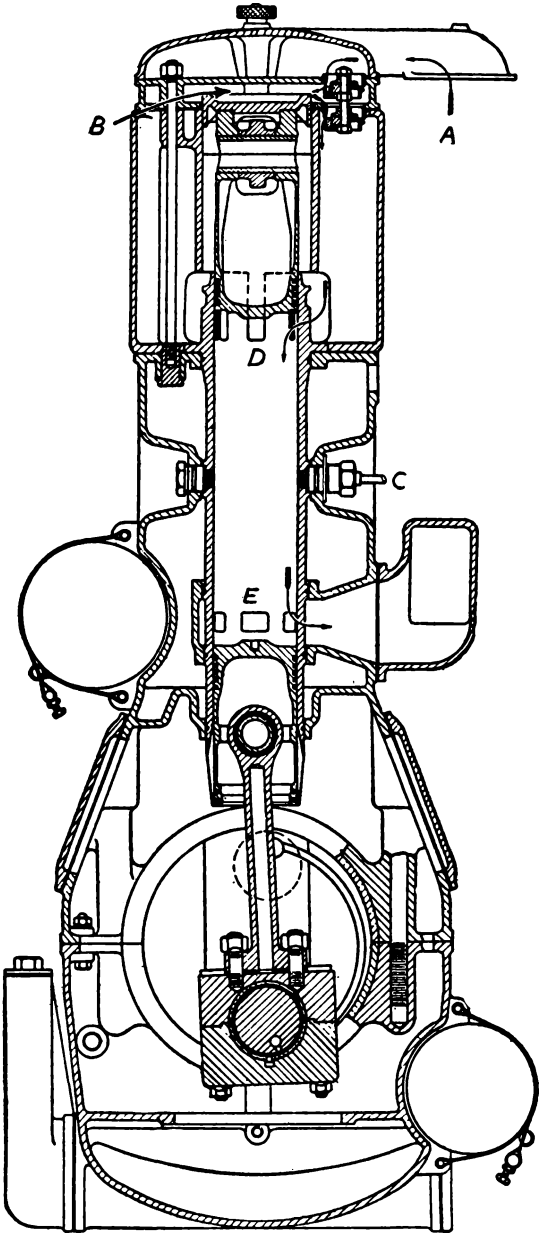

FIG. 213.—Section of the Junkers Diesel.

(A) Air inlet.
(B) Compressor.
(C) Fuel injection valve.
(D) Inlet ports.
(E) Exhaust ports.

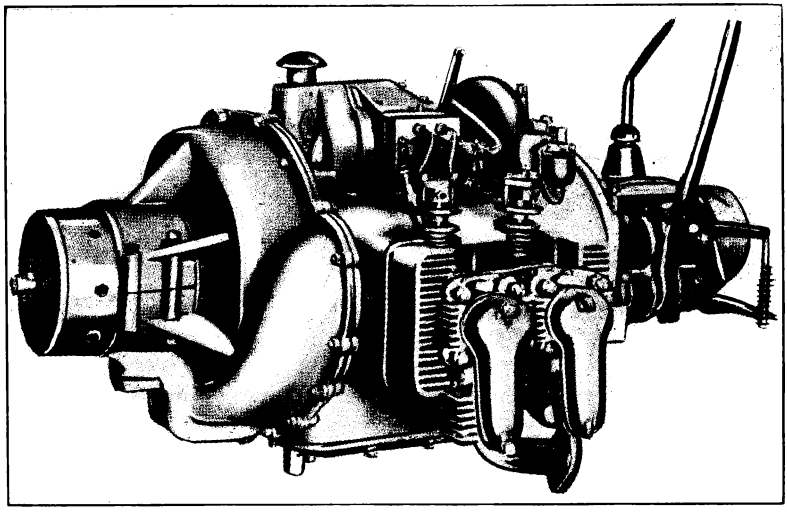

FIG. 214.—Krupp Diesel Engine.

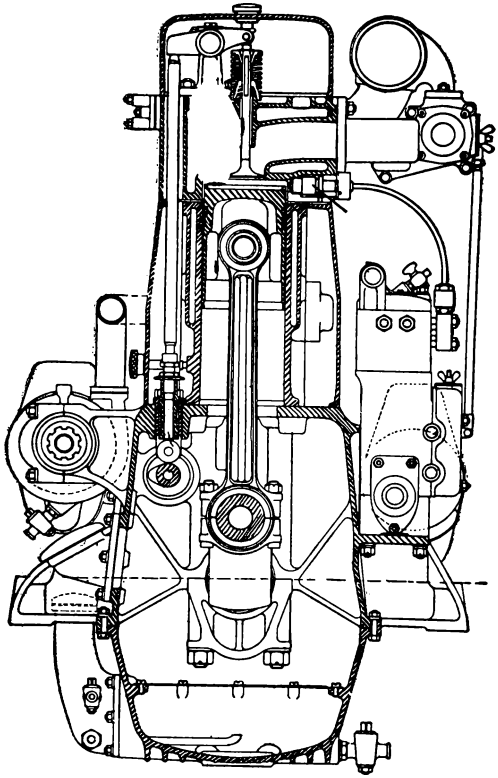

FIG. 215.—M.A.N. Open Chamber Diesel Engine.

M.A.N. (Germany). The M.A.N. produces Diesel engines of the automotive type of 5 and 6 cylinders, shown in Figs. 215 and 216. The M.A.N. Diesel engines have featured an open combustion chamber, but their latest designs are using the air chamber. The intake valve is shrouded in the open-chamber type, which causes turbulence of the incoming air charge. The engines are of 4.73 to 5.5-in. bore and 7.10-in. stroke. They operate at maximum speeds

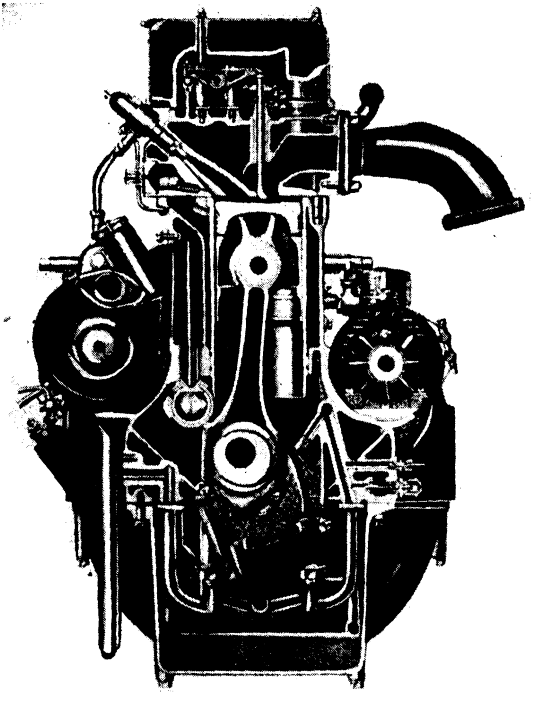

FIG. 216.—M.A.N. Air Chamber Diesel Engine.

of 1400 to 1700 r.p.m. The cylinder block in the latest design, Fig. 216, is of cast iron with renewable wet sleeves, the crankcases are of aluminum, while the pistons are of aluminum alloy.

MEADOWS (England). The Meadows Diesel engine is of the air chamber design (Lanova) and is produced in 4 as well as in 6 cylinders. Meadows engines are of 4.13-in. bore and 5.91-in. stroke. The 4-cylinder engine develops 67 b.hp. and the 6-cylinder 100 b.hp.

at 2000 r.p.m. The fuel consumption for either type is 0.42 lb. per b.hp. hr.

The constructional features include: a cylinder block fitted with hardened cylinder sleeves of the wet type; crankcase of aluminum

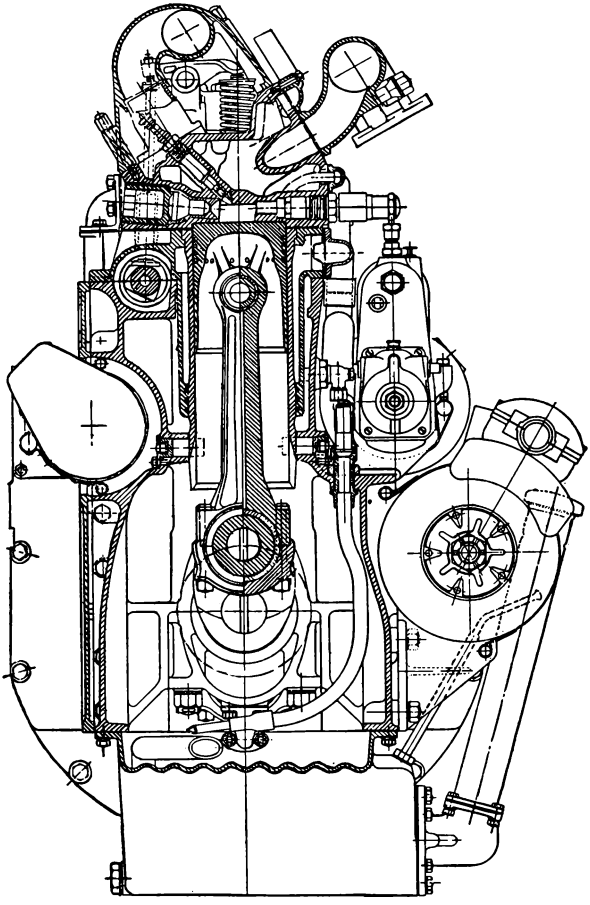

FIG. 217.—Meadows Diesel Engine.

alloy; nickle-chrome steel crankshaft with steel-backed bearings; chain timing gear; pistons of aluminum alloy.

The Meadows engines are equipped with Bosch fuel pumps and injectors; glow plugs are provided for starting.

The crankcase is very unusual, as it is very deep, extending nearly to the top of the cylinder block which sets down inside the crankcase. The camshaft is located very high on the side of the engine, at the juncture of the case and block.

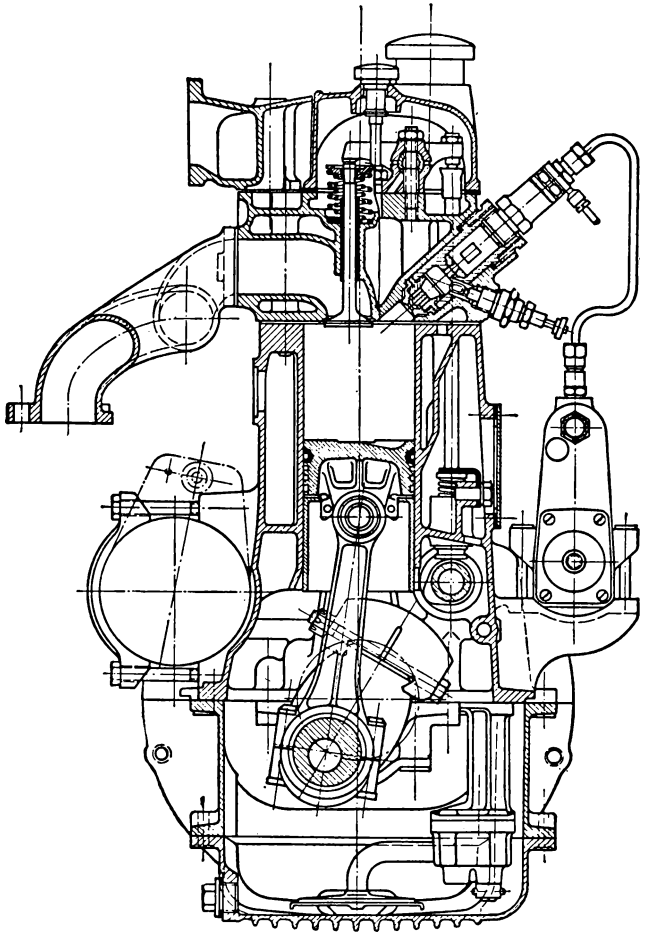

FIG. 218.—Mercédès-Benz Diesel Engine.

MERCÉDÈS-BENZ. The engine shown in Fig. 218 features antechamber combustion. The engine is of 3.55-in. bore and 3.94-in. stroke. The engine develops 45 b.hp. at 3000 r.p.m. and is equipped with the Bosch fuel pump and an electric starter.

Other Mercédès-Benz engines are built in 6 and 12 cylinders for trucks, buses and railcars with a maximum of 500 b.hp. at 1600 r.p.m. Some of these larger engines have a maximum b.m.e.p. of 112 lb. per sq. in.

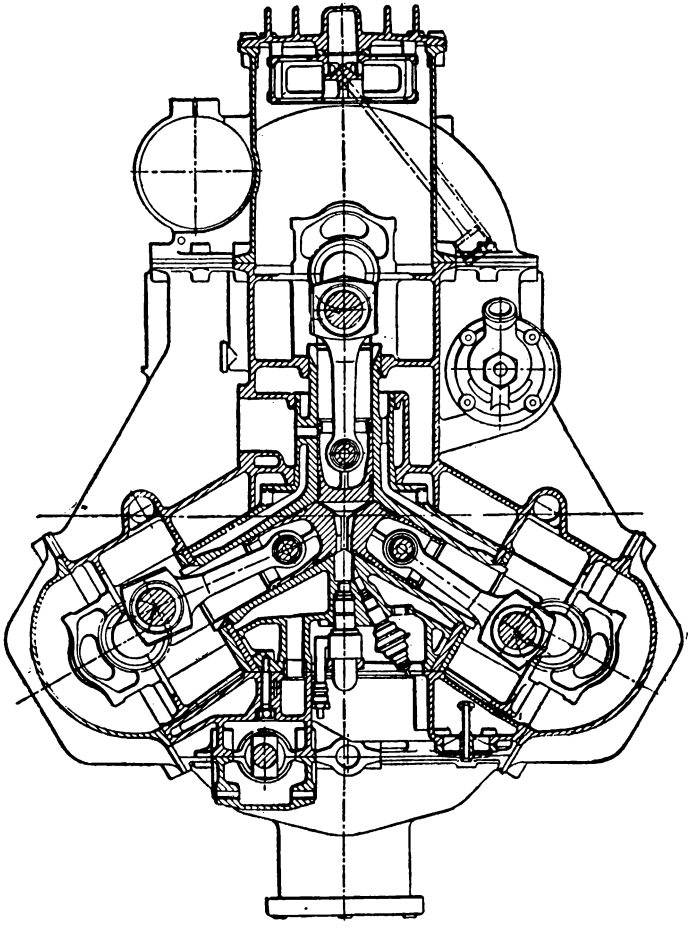

FIG. 219.—Michel 2-Cycle Diesel Engine.

In Fig. 218, the integral crankcase and cylinder block are of cast iron, and the pistons aluminum alloy. However, in most of the larger engines the cylinder casting, the crankcase and the valve cover are of an aluminum alloy; the cylinder proper consists of cast-iron

liners or sleeves; the pistons have either aluminum or cast-iron skirts, the piston tops are of drop-forged steel.

MICHEL (Germany). The Michel Motor Co. manufactures a novel Diesel engine of the star type, each unit consisting of 3 cylinders. Thus a 3-cylinder unit is called "one star," a 6-cylinder unit "two stars," 9-cylinder units "three stars" and so forth. The engine is shown in Fig. 219.

The dimensions of this engine are rather small, the cylinder bore is 2.63 in. and the stroke is 4.57 in.; thus "one star" of 3 cylinders has a displacement of 75 cu. in. The engine develops 44 b.hp. at

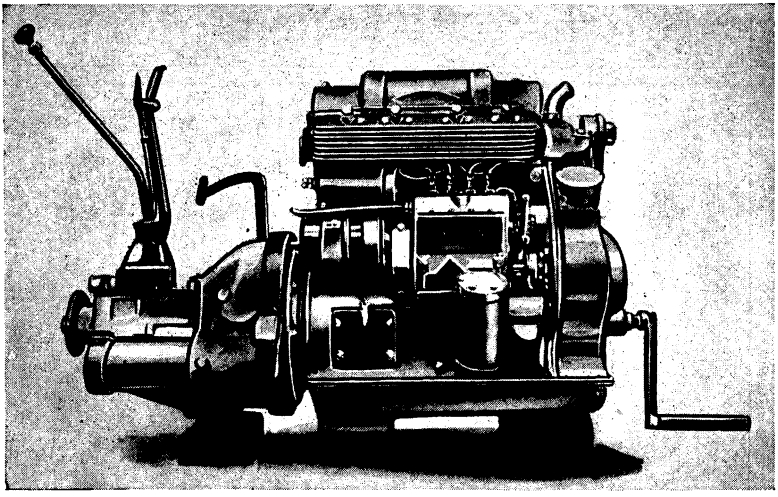

FIG. 220.—Perkins Diesel Engine.

2000 r.p.m., with a fuel consumption of 0.54 lb. per b.hp. hr. At reduced load (not speed) the engine develops 34 b.hp. at 2033 r.p.m. with a fuel consumption of but 0.46 lb. per b.hp. hr. The maximum b.m.e.p. is 113 lb. per sq. in. and was realized at an engine speed of 2027 r.p.m. The engine thus develops approximately ½ b.hp. per cu. in. displacement at 2000 r.p.m., a really astonishing figure.

The engine being of the 2-cycle type, two, three or more stars can readily be bolted together, thus forming engines of say 40, 80, 120 b.hp. and so on.

PERKINS (England). The Perkins engines are made in four sizes, all of the 4-cylinder type. The combustion chamber employed is the Perkins "Aeroflow." The Perkins Wolf type Diesel engine is shown in Fig. 220.

The engine is of 3.35-in. bore and 4.75-in. stroke, 170 cu. in. displacement. The engine delivers 45 b.hp. at 2400 r.p.m.; the fuel consumption is given as being 0.43 lb. per b.hp. hr.

A smaller Perkins engine called the Fox is of 3.15-in. bore and

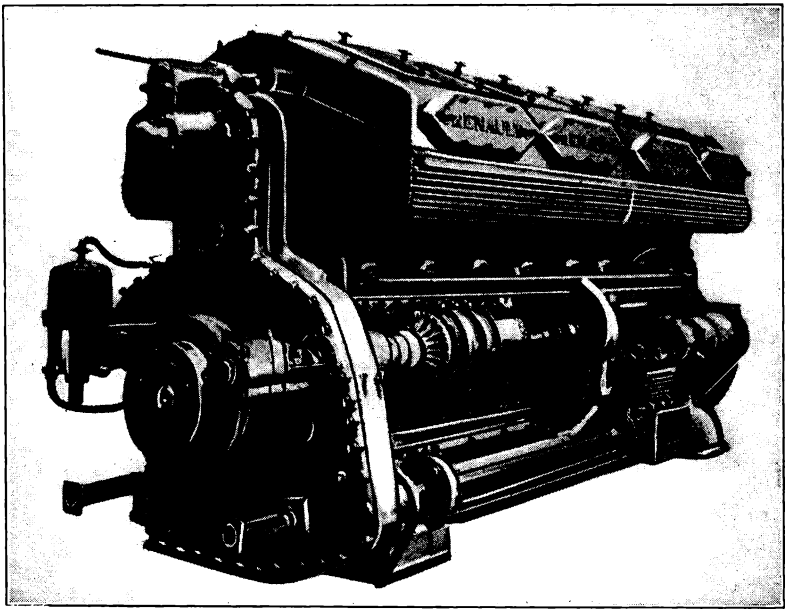

FIG. 221.—The Renault V-16 Diesel Engine.

4.75-in. stroke, 145 cu. in. displacement. The engine delivers 45 b.hp. 3000 r.p.m. and operates smoothly at 4000 r.p.m.

The camshaft is located near the top of crankcase and block casting, thus permitting the use of short valve push rods.

RENAULT (France). An interesting design is the Renault V-16 Diesel engine of 6.14-in. bore and 7.09-in. stroke. The V-type cylinders as well as the crankcase are cast en-bloc of aluminum alloy. The cylinder heads and pistons are also aluminum castings. Renewable cast-iron sleeves are used for the cylinders proper.

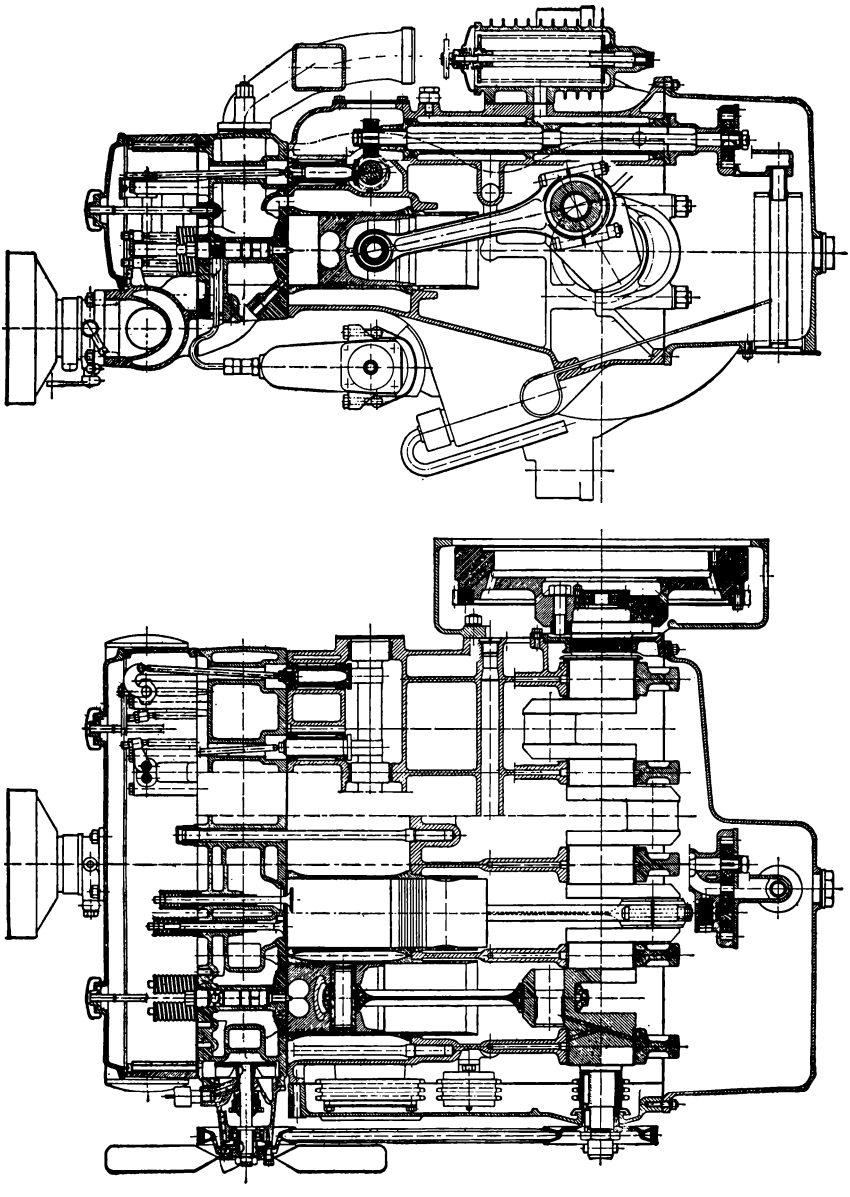

FIG. 222.—Saurer Diesel Engine.

The engine is of the open combustion chamber type, with direct injection; the nozzles are located in the center of the cylinder head. Two intake and two exhaust valves per cylinder are provided. The fuel injection pump is of Renault design and manufacture. The engine has 3330 cu. in. displacement and delivers 500 b.hp. at 1500 r.p.m. The b.m.e.p. is 77 lb. per sq. in. This is the largest of a series of engines built for railcar service.

SAURER (Switzerland). The Schweizerische Lastwagenfabrik

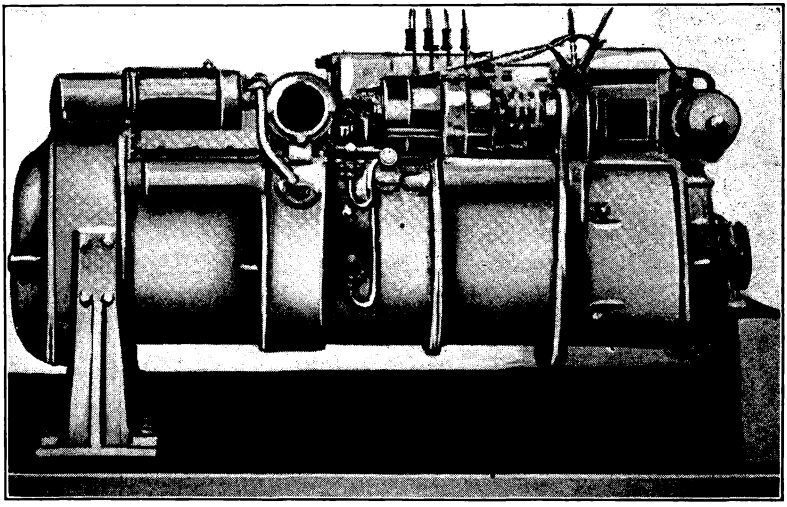

FIG. 223.—Sterling Barrel Type Diesel Engine.

Saurer formerly used the Acro-Bosch air chamber type of combustion chamber, but now makes use of the Saurer direct-injection system. The Saurer injection system is used by Armstrong (Britain) and others. Saurer engines are now equipped with Saurer fuel pumps. Various types of engines from 4 to 12 cylinders are being manufactured.

The Saurer Diesel in Fig. 222 is of the 4-cylinder type, having a 3.35-in. bore and 4.93-in. stroke. It develops 50 b.hp. at 2500 r.p.m. The 6-cylinder engines of this size develop 88 b.hp. at 3000 r.p.m. The compression ratio is 18.5 to 1.

The largest Saurer Diesel engine is a V-12 or 5.12-in. bore and 7.10-in. stroke. It develops 360 b.hp. at 1500 r.p.m. The com-

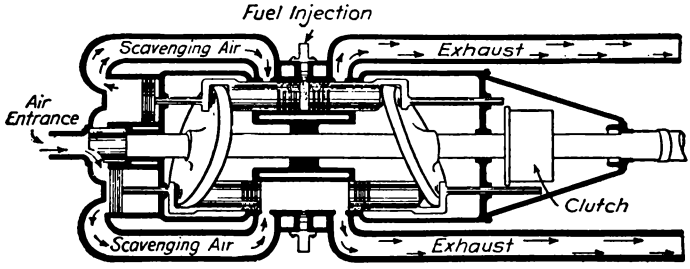

FIG. 224.—Sterling Barrel Type Diesel Engine.

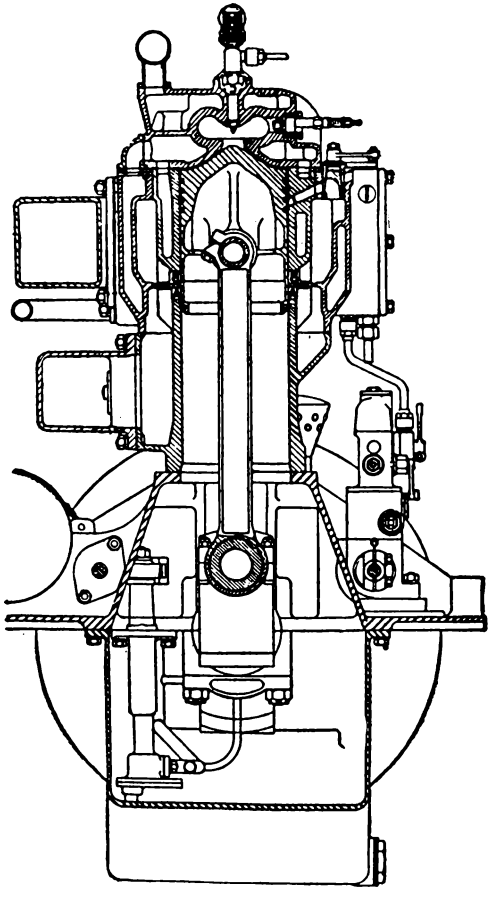

FIG. 225.—Tartrais-Peugeot Diesel Engine.

pression ratio is 15.4 to 1, the compression pressure is 455 lb. and the combustion pressure 1500 lb. per sq. in.

The wet sleeves are of novel construction, as they are located by a flange at the bottom of the water jacket rather than at the top. This construction has the advantage of providing the best possible cooling for the top of the sleeve.

STERLING. The Sterling Engine Company manufactures a crankless opposed-piston barrel-type Diesel engine consisting of 4 cylinders arranged in cross form, Fig. 223. These engines are built in various sizes—

3½-in. bore, 4¾-in. stroke, 125 b.hp. at 1800 r.p.m.
5-in. bore, 6¾-in. stroke, 300 b.hp. at 1500 r.p.m.
6-in. bore, 8-in. stroke, 600 b.hp. at 1500 r.p.m.

The Sterling engines are of the 2-cycle type. The inclined disks (wabble plates) are virtually flywheels. Piston-type pumps attached to 4 of the 8 pistons act as compressors forcing air into the ports and

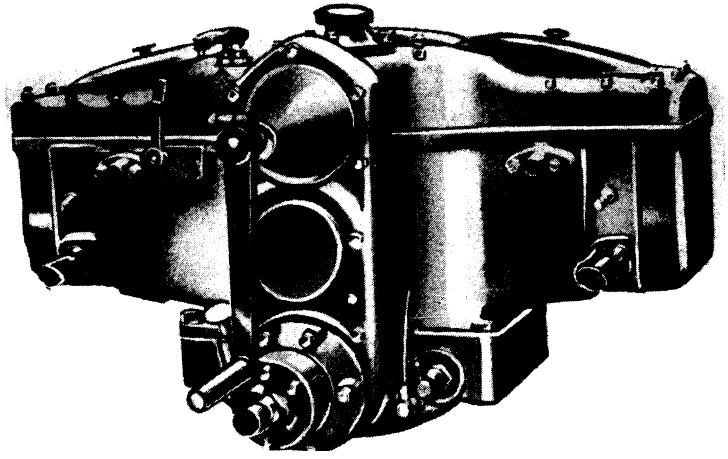

FIG. 226.—Victor Cub Diesel Engine.

combustion chambers. A rotary valve at the end of the shaft distributes the compressed air to the various cylinders. The weight of these engines varies from 13 to 20 lb. per b.hp. The operating principle and fuel injection are shown in Fig. 224.

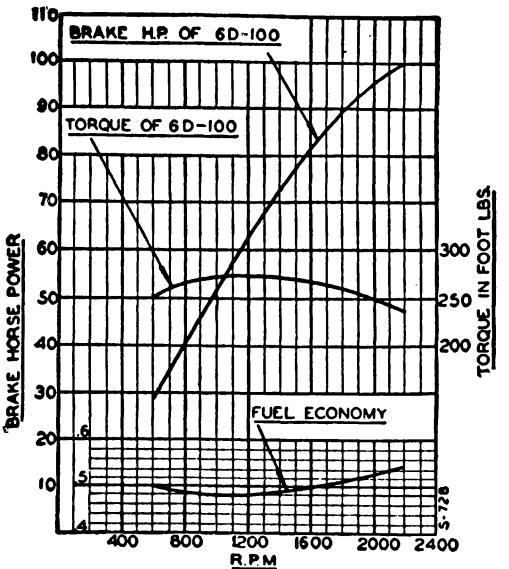

FIG. 227.—Performance of 6-D 100 b.hp. Waukesha Diesel.

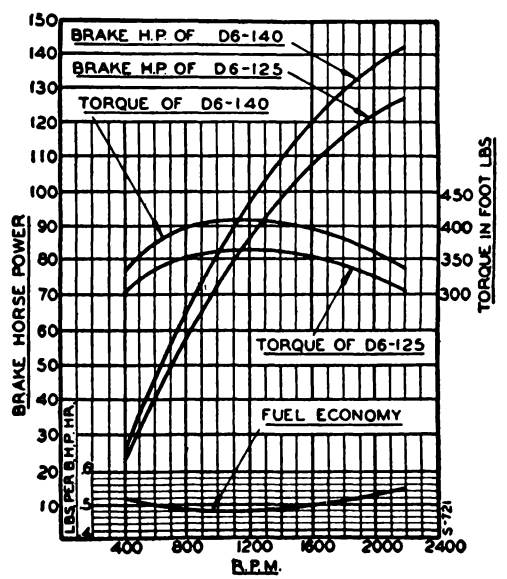

FIG. 228.—Power Curves, D-6 Waukesha Diesel.

TARTRAIS-PEUGEOT (France). Peugeot is building Diesel engines of the Tartrais antechamber construction, Fig. 225. The Tartrais-Peugeot engine is of the 2-cylinder, 2-cycle type of 4.73-in. bore and 5.91-in. stroke, delivering 53 b.hp. at 1450 r.p.m. with a b.m.e.p. of 73.5 lb. per sq. in.

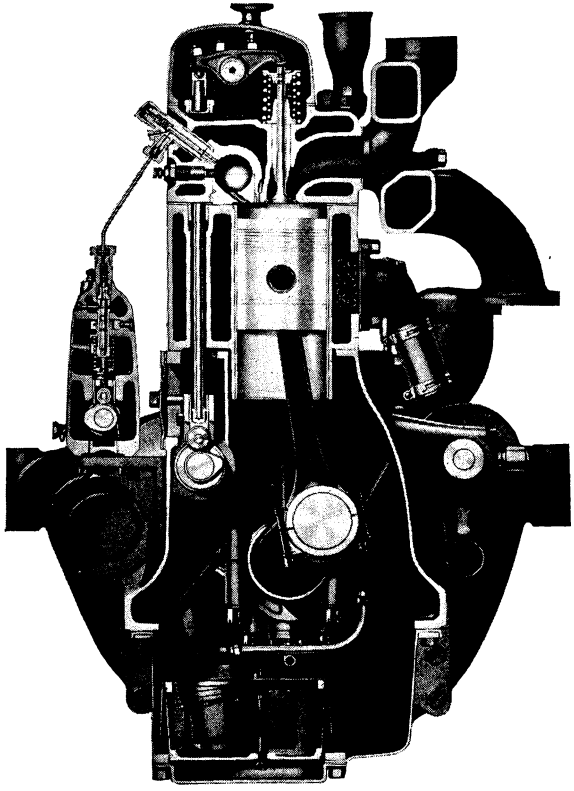

(Courtesy of Waukesha Motor Company)

FIG. 229.—Cross-section, Waukesha Diesel Engine.

The air compressor used is of the single-piston type of 8.27-in. bore and 3.49-in. stroke, driven directly from the crankshaft at engine speed.

VICTOR CUB (England). The Victor Oil Engines, Ltd., build one of the smallest Diesel engines. The engine is shown in Fig. 226.

The engine is of the 2-cylinder opposed type, of 3.15-in. bore and 3.94-in. stroke, and 60.5 cu. in. displacement. The chamber

construction used with this engine is of the turbulence type. The fuel consumption of this minature engine is given as 0.4 lb. per b.hp. hr. The engine develops 20 b.hp. at 3000 r.p.m.

WAUKESHA. The Waukesha Motor Company is building a number of high-speed, automotive-type Diesel engines featuring the Comet Turbulence chamber (Ricardo Patents).

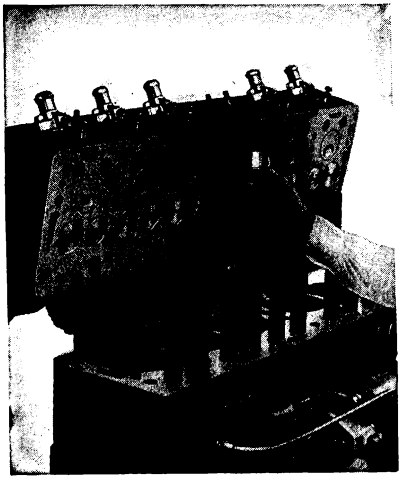

FIG. 230.—Waukesha Comet Turbulence Chambers.

Inserts are renewable and can be varied in size for different compression ratios.

The type D-6 is made in two sizes, either 4¾- or 5-in. bore and 5½-in. stroke. The minimum speed of 400 r.p.m. is quite satisfactory for automotive use, but its high speed, 2200 r.p.m., would seem to need further increase.

In addition to the 125 and 140 b.hp. engines, Waukesha also manufactures a small engine (6-D) of 100 b.hp. with a bore and stroke of 4⅜ in. by 5⅛ in. The performance of this smaller engine is shown in Fig. 227. Waukesha engines are equipped with Bosch fuel pumps and pintle-type nozzles.

The 100 b.hp. engine is shown in Fig. 229. Dry sleeves are used in the alloy iron cylinder block. They are ground after being pressed into place. The larger engines have the cylinder block and crankcase cast integral. The finished sleeves are pressed into the ground cylinders.

A separate ring, about ½ in. wide and with an inner diameter slightly larger than the bore of the sleeve, is placed on top of the sleeve. This protects the sleeve from the high combustion temperatures near the cylinder head where insufficient cooling causes many sleeves to become overheated.

CHAPTER 11

AIRCRAFT DIESEL ENGINES

In the field of aircraft the Diesel engine has many advantages. An airplane engine must be reliable to a point quite unnecessary to strive for in land transportation; one non-stop flight will often demand continuous operation equivalent to literally months of service in a private automobile, and under far more difficult and variable conditions. In the course of an hour or more the engine may be called upon to function at full power in temperatures ranging from summer heat to winter cold.

Fire hazard, too, in a gasoline-engined plane is an ever-present menace. In an automobile the actual weight of fuel is of little importance; in an airplane every additional pound required for fuel means a pound less of pay load. Moreover, fuel cost, which is of only minor importance in automobiles, becomes increasingly important in airplanes because of the large amounts of fuel required by engines working at full capacity. And last but not least, the problem of radio interference, so troublesome with spark-ignition engines, must be solved if the plane is to function efficiently under modern conditions.

At every one of these vital points the Diesel engine shows advantageously:

1. *Reliability.* In two respects the Diesel engine is inherently more reliable than the gasoline engine:

First, the electrical ignition system, so often the cause of failure or inefficiency in the gasoline type, is completely eliminated in the Diesel; and second, each cylinder operates independently of the rest. In the gasoline engine, with a single carburetor feeding several cylinders, trouble in the carburetor immediately affects them all. In the Diesel engine, however, with fuel injected separately into each cylin-

der, failure of any one fuel pump affects only one cylinder, and the engine will be more likely to continue functioning in spite of the trouble.

2. *Effect of Air Temperatures.* In the gasoline engine abnormally high air temperatures tend to cause detonation or pre-ignition, and abnormally low temperatures may lead to freezing of the carburetor during periods of idling, with the result that after such a maneuver as a long glide, the engine may fail to respond to the throttle. The Diesel engine shows neither of these defects, nor any other harmful effect due to changes in the temperature of the outside air.

3. *Fire Hazard.* In spite of all modern precautions, the danger of fire, as for instance in case of a crash or of leakage during flight, is a grim passenger on every flight with a gasoline engine. It is an inseparable element when any highly volatile fuel is used. But the fuel used in the Diesel engine is so lacking in volatility that even in the engine itself it must be atomized before it will ignite. Therefore, it is virtually impossible for it to take fire accidentally in even the most extreme circumstances likely to be encountered in flight.

4. *Fuel Consumption.* The weight of fuel consumed under comparable conditions in a gasoline and a Diesel airplane engine is at least 10 per cent less for the Diesel. Moreover, because fuel oil has a higher specific gravity than gasoline, its volume is more than 30 per cent less for the same effective amount. Hence, the Diesel-engined plane will require only 70 per cent of the fuel space required for the gasoline type, and need allow for only 90 per cent of the weight of the corresponding amount of gasoline.

5. *Fuel Cost.* As has already been pointed out, the lower grade fuel oil used in the Diesel engine is intrinsically cheaper than gasoline, and will remain so unless artificially increased in price by taxation, etc. At present the differential in favor of Diesel fuel oil is about 300 per cent.

6. *Radio Interference.* Even the best methods of shielding employed to eliminate ignition interference in gasoline-engined airplanes leave much to be desired, especially at the high frequencies usually employed for aircraft, and in addition, these methods are bound to reduce the efficiency of the ignition system, already a large

potential source of engine failure. The Diesel engine, however, having no electrical ignition system, eliminates interference at its source. Even under present conditions the superiority is noticeable, but in the future, as length of flight increases, as on trans-oceanic airlines, with consequently longer distances over which signals must be received, this matter of interference originating in the engine itself is bound to become increasingly important.

7. *Savings in Fuel Weight.* Gasoline aircraft engines have a fuel consumption of from 0.50 to 0.55 lb. per b.hp. hr., whereas Diesel engines consistently show a consumption of from 0.40 to 0.45 lb. per b.hp. hr. While it is true that some aviation engines have operated on as little as 0.46 lb. per b.hp. hr., it is equally true that Diesel engines have run on but 0.35 lb. per b.hp. hr.

It would be fair to make fuel-weight comparisons using the best performance of the gas engines 0.50 lb., and the rather high figure in the case of the Diesel 0.45 lb. The saving then would amount to 0.05 lb. per b.hp. hr. Fig. 231 illustrates the saving in weight realized with a 100 b.hp. plane.

It may be argued that a 100 b.hp. plane would be a privately owned one, carrying perhaps 2 or 3 passengers. It may also be said that no privately owned plane would, in the main, be operated

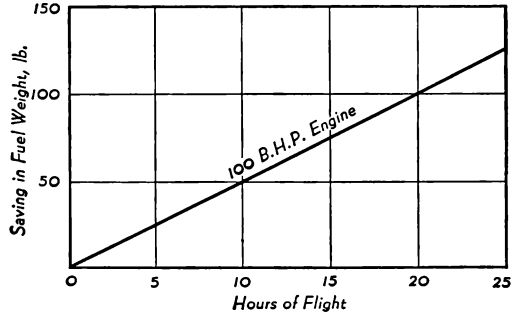

FIG. 231.—Fuel Savings, 100 b.hp. Diesel Engine.

for more than about 5 hours of continuous flight; hence the saving of 25 lb. of fuel is of no great consequence. Perhaps this is so, although it would provide for baggage carrying capacity not otherwise allowed for. Oil would occupy less space and thus allow for greater comfort on the part of the occupants. But for large transport

planes, the matter of fuel weight is one of major proportions, as illustrated in Fig. 232.

It must be admitted, however, that up to the present time, the weight of the Diesel engine per b.hp. is more than the gasoline engine. There seems to be no reason why further design improvement should not reduce this until the engine weight, plus fuel, would be advantageous for the Diesel.

8. Altitude Losses. No internal combustion engine can maintain its sea-level power output at high altitudes unless supercharging is resorted to. This is due to the fact that the rarified air of the

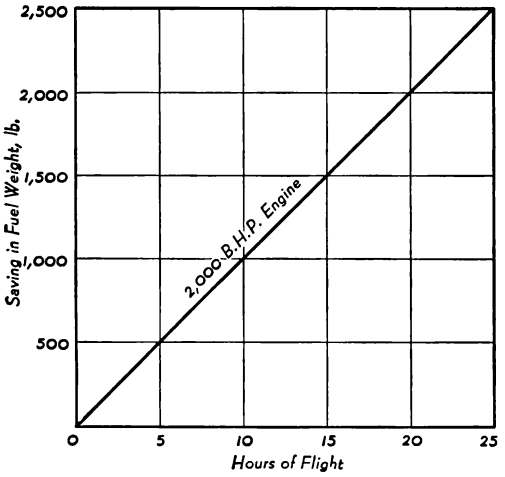

FIG. 232.—Fuel Savings, 2000 b.hp. Diesel Engine.

upper strata weighs less per cubic foot than the air at sea level. Hence the actual weight of air taken into a cylinder is less at high altitudes, and the engine's power output decreases, while the amount of fuel burned increases. While the fundamental power-altitude ratio applies to Diesel engines as well as to gasoline engines, the Diesel engine is less affected and a plane powered with a Diesel engine will reach a higher altitude, has a higher ceiling, than a plane powered with a gasoline engine. The advantage of the Diesel engine over the gasoline engine is shown in Fig. 233.

The aircraft Diesel engine has not as yet attained the popularity of the vehicle and boat Diesels, yet, strenuous efforts are being made in various countries to bring this type of engine to the fore. A

number of military type Diesel aircraft engines are being developed now by various governments.

9. Ice Danger. Most of the modern aviation engines are equipped with rotary inductors if not with superchargers, usually placed between the carburetor and manifolds.

At partly closed throttle, the inductor or supercharger rotating at high speed creates a vacuum, which may cause the formation of ice at the throttle during the cooler months of the year, or at high altitudes even in mid-summer. At full, or nearly full-open throttle, ice may form in the carburetor due to the strong suction of the inductor or supercharger, and the vaporization of the gasoline.

This hazard is partially responsible for the development of an injection system for gasoline or fuel oil. The fuel is injected into the manifold next to the inlet valve during the suction stroke. Therefore, no carburetor is required, but the magnetoes and spark plugs still furnish the ignition.

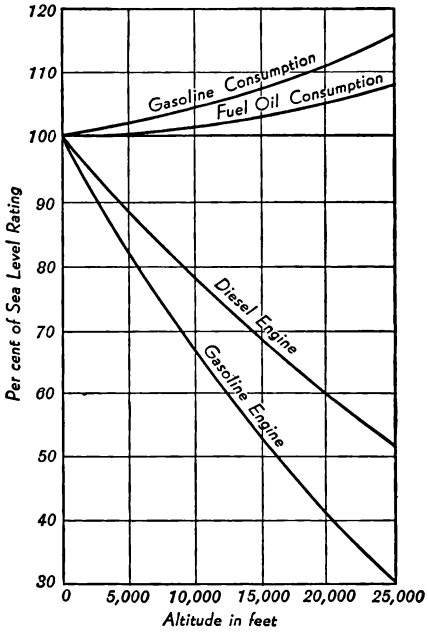

FIG. 233.—Altitude Performance, Diesel vs. Gasoline Engine.

BEARDMORE. The firm of Wm. Beardmore has brought out a 12-cylinder horizontal double opposed Diesel engine of the "flat" type. Fig. 234.

The engine is of 6-in. bore and 6½-in. stroke, and 2200-cu. in. displacement. It delivers 500 b.hp. at 1750 r.p.m. The propeller speed is but 950 r.p.m. by means of a reduction gear. The weight of the engine is approximately 3 lb. per b.hp. Two 6-cylinder injection pumps are fitted, each pump supplying one bank of 6 cylinders. The engine is intended for mounting in a thick wing monoplane structure.

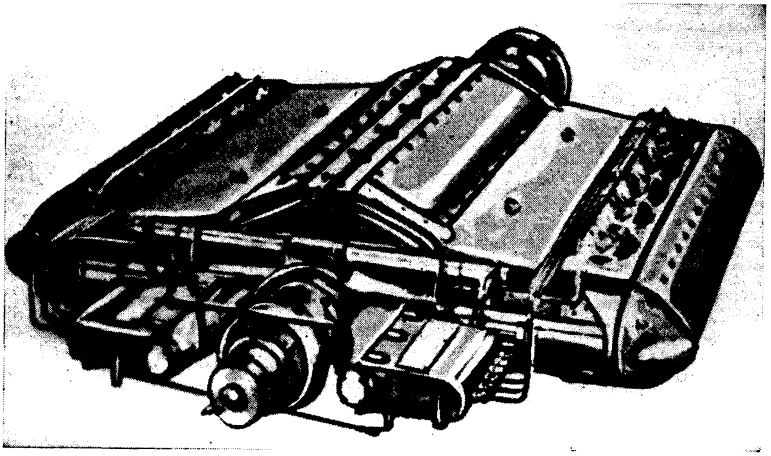

FIG. 234.—Beardmore 12-Cylinder Diesel.

Another Beardmore Diesel engine is the Tornado, intended for lighter-than-air craft. This engine, of the 8-cylinder vertical type, is shown in Fig. 235.

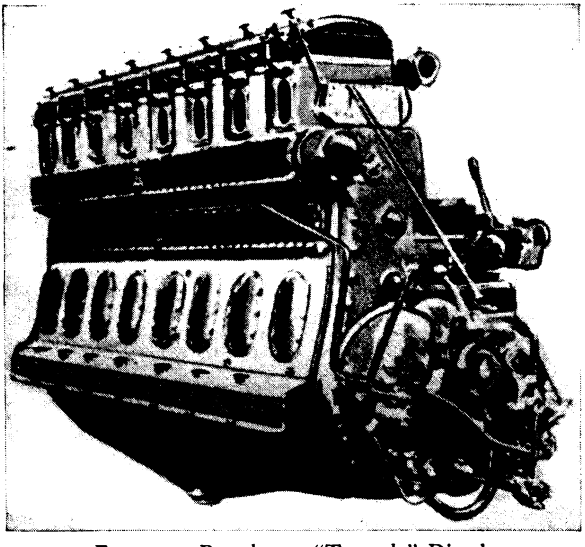

FIG. 235.—Beardmore "Tornado" Diesel.

This engine has a bore of 8½ in. and a stroke of 10 in. The compression ratio is 12½ to 1 and the b.m.e.p. is 100 lb. per sq. in. The fuel consumption is from 0.35 to 0.40 lb. per b.hp. hr.

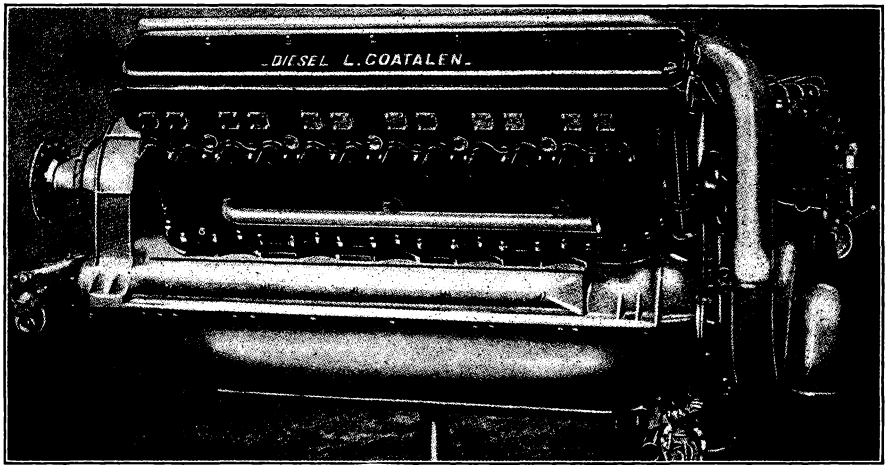

FIG. 236.—The 600-hp. Coatalen 12-Cylinder Diesel Aviation Engine.

BRISTOL PHOENIX. The Bristol Aeroplane Company has developed a Diesel airplane engine known as the Phoenix. Fig. 237.

The Bristol Phoenix engine is of the 9-cylinder radial type of 5¾-in. bore and 7½-in. stroke, a displacement of 1753 cu. in. It

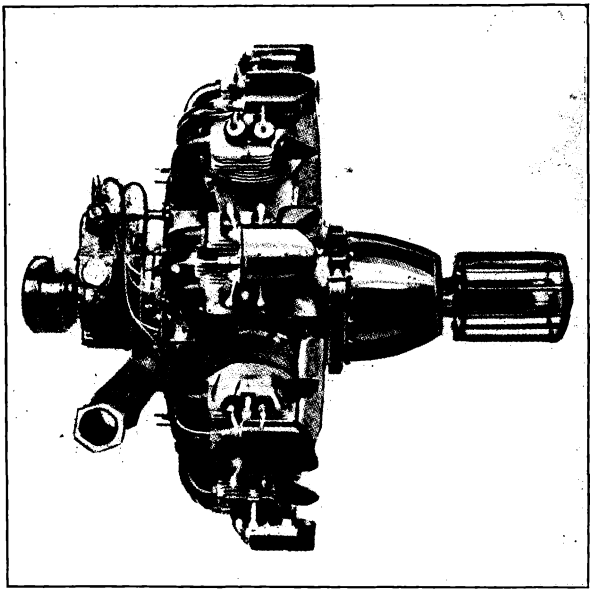

FIG. 237.—Bristol-Phoenix Diesel.

delivers 470 b.hp. at 2000 r.p.m. but is rated 415 b.hp. at 1000 r.p.m. The weight of the engine is 1090 lb. complete.

The engine uses twin fuel pumps, one feeding 5 cylinders, the other but 4 cylinders, the fifth outlet being by-passed. The performance of the Bristol-Phoenix Diesel engine is shown in Fig. 238.

CESKOSLOVENSKA ZBROJOVKA. The Zbrojovka aircraft Diesel engines known as the ZOD-240A and ZOD-Jalbert are recent developments, motivated by a desire to utilize fuel oil or coal-tar oil rather than gasoline.

The ZOD-240A engine is of the 9-cylinder radial type, air-cooled. The bore is 4.73 in. and the stroke 5.13 in. The engine

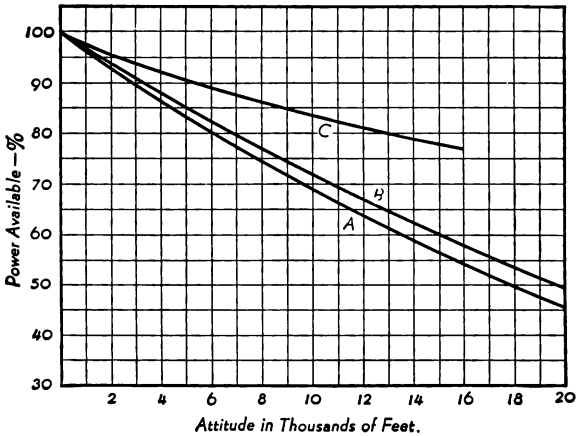

FIG. 238.—Power of Bristol-Phoenix Diesel Engine at Various Altitudes.

A—Bristol gasoline engine, open aspiration.
B—The same supercharged.
C—Bristol Diesel engine, open aspiration.

delivers 260 b.hp. at 1560 r.p.m. The compression ratio is 15 to 1 and the fuel consumption is given as 0.40 lb. per b.hp. hr. The brake-mean-effective-pressure is 62 lb. per sq. in. and the weight of the engine (bare) is 640 lb.

The engine is of the 2-cycle type, air being supplied by a compressor through tangential ports uncovered by the piston at a pressure (gauge) of 5 lb. per sq. in. The exhaust is through dual valves in the cylinder head.

This type of construction permits uniflow scavenging and is thus

superior to the double-ported engines. The maximum combustion pressure is given as 1120 lb. per sq. in.

The cylinders are machined from chrome-manganese steel; the cylinder heads are of aluminum alloy secured to the cylinder barrels

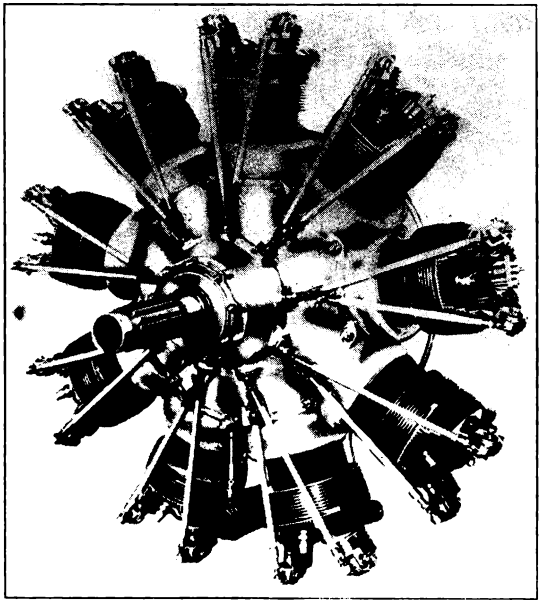

FIG. 239.—Zod Aviation Diesel Engine.

by screwing-on while hot and are then shrunk tight. The crankcase is of a forged aluminum alloy.

COATALEN. A modern French aviation Diesel is the Coatalen, now undergoing tests at the Service Technique de l'Aeronautique Francaise. The engine is of particular interest to the French Military Air Service, as well as to *Air France,* the major French air transport company.

The Coatalen engine, officially designated as type 12 V res2, is a water-cooled V-type Diesel; 2 banks of 6 cylinders are mounted at the customary angle of 60° to each other. The engine has a bore of 5.91 in. and a stroke of 6.69 in., hence 2200 cu. in. displacement. The normal power output is 550 b.hp. at an altitude of 10,000 ft. The engine is shown in Fig. 236.

A supercharger of the centrifugal type is fitted to the engine so that full aspiration may be maintained in high altitudes. The fuel injection system used is the so-called "accumulator" system, i.e., a variation of the well known Vicker's Common Rail. Two fuel pumps of 3 cylinders each supply fuel to the accumulator, maintaining a pressure of 10,000 lb. per sq. in. Twelve individual injectors properly timed by means of a camshaft, give four-cycle operation,

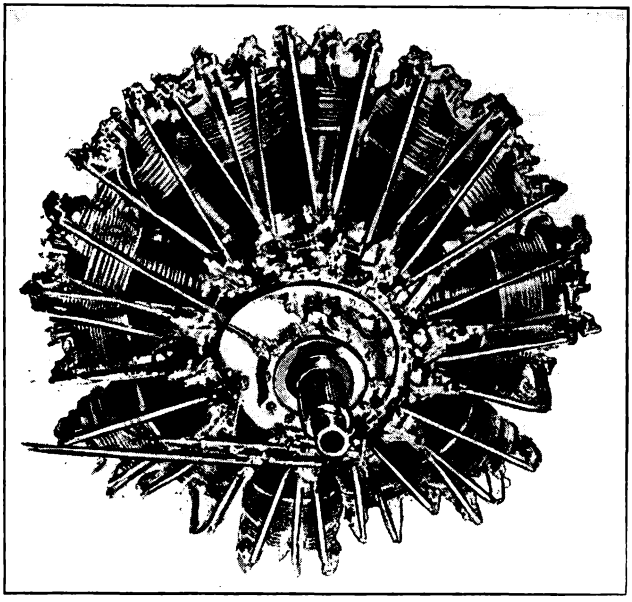

FIG. 240.—Clerget 14-Cylinder Aviation Engine.

drawing from the fuel supply stored under pressure within the accumulator.

On the block, the Coatalen engine developed 600 b.hp. at a speed of 2200 r.p.m. with a fuel consumption of 0.36 lb. per hp. hr., a figure that could perhaps be reduced to but 0.33 lb. The weight of the engine is 1170 lb., or slightly over 2 lb. per b.hp., but it is expected that further developments will reduce the weight considerably. The motor is fitted with a 3 to 2 reduction gear permitting a propeller speed of but 1350 r.p.m. at the normal engine speed. An American-type Lockheed hydraulic starter is used to start the engine rather than the usual electric starter.

CLERGET. The Clerget type 14F aviation engine is illustrated in Fig. 240. This engine is a 14-cylinder radial air-cooled engine delivering 500 m.hp. at 1850 r.p.m. The motor is of 5.52-in. bore and 6.31-in. stroke. The weight of the engine (bare) is approximately 1400 lb. The fuel consumption is given as 0.35 lb. per b.hp. hr. The b.m.e.p. is 97.5 lb. per sq. in.

In addition to this large engine, Clerget also manufactures two smaller engines, Fig. 242, of 9 cylinders each. The smaller of these engines has the following specifications:

Clerget type (A)
Bore 4.73 in., stroke 5.13 in.
Displacement, 820 cu. in.
100 b.hp. nominal.
Weight (bare), 335 lb.
Brake-mean-effective-pressure, 87.5 lb. per sq. in.
Maximum speed, 1900 r.p.m.
Fuel consumption, 0.395 lb. per b.hp. hr.

Hispano Suiza is building these engines under license from Clerget.

The fuel pump used on the Clerget Diesel engines is shown in Fig. 241. The oil feed line is connected at *A*. The oil enters the pump barrel through radial holes as the plunger moves down. Injection begins when the plunger covers these suction ports, and is controlled by the vertical position of the barrel, which may be varied by the linkage and the control ring *B*.

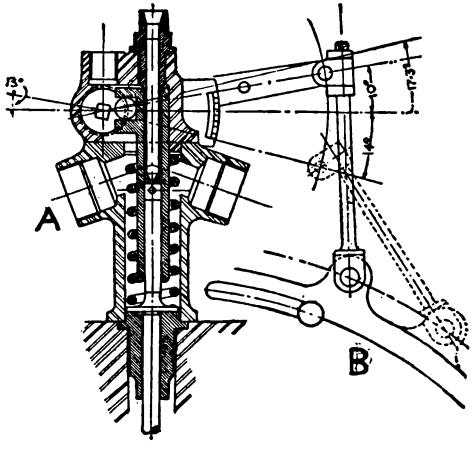

FIG. 241.—Clerget Fuel Pump.

The compression ratio of all Clerget engines is 14 to 1; the combustion chamber is of the open type, i.e., a concave piston head. The pistons are of aluminum alloy and the cylinders and liners of forged steel. Each cylinder carries its own fuel pump

feeding two nozzles per cylinder. These engines are now undergoing military tests, and it is said that they provide an increased radius of operation of from 35 to 40 per cent as compared with planes driven by gasoline engines. The minimum fuel consumption so far attained is said to be 0.35 lb. per b.hp. hr.

DESCHAMPS. The Deschamps Diesel engine, built by the Lambert Engine & Machine Company, is a 2-cycle engine of the 12-cylinder inverted V-type, as shown in Fig. 243, with two banks of 6 cyl-

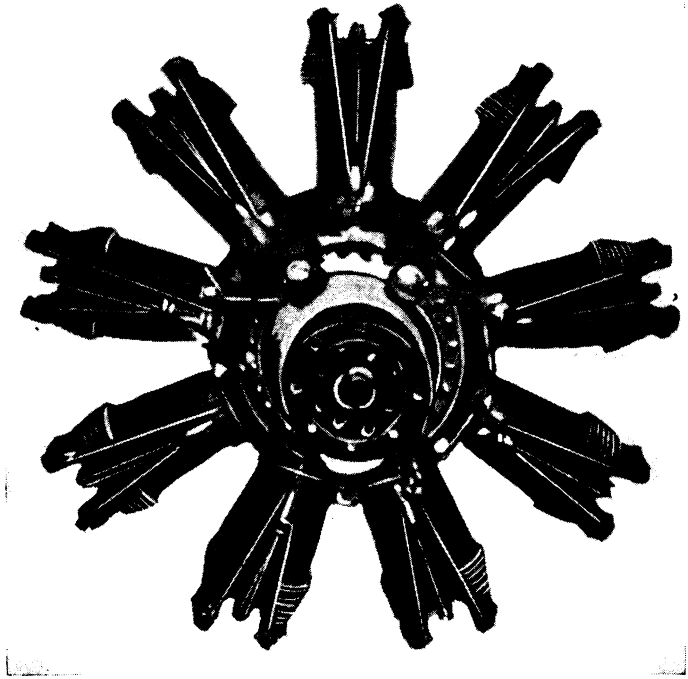

FIG. 242.—Clerget 9-Cylinder Diesel Engine.

inders each, at an angle of but 30° instead of the usual 45°. The cylinders are of 6-in. bore and 9-in. stroke, giving a total displacement of 3052 cu. in. The power rating is 1200 b.hp. at 1600 r.p.m.

The cylinder blocks and the crankcase are made in one single casting of aluminum alloy. The cylinders proper are of the wet-sleeve type of Nitralloy hardened steel.

FIAT. The Fabricca Italiano Di Automobili Turino, better known as the *Fiat,* manufactures an aviation Diesel engine known

as the A.N.I., as shown in Fig. 244. This engine has, to a great extent, been built up of parts from this company's well-known A.12 gasoline aircraft engine. The engine is of the 6-cylinder type of 5.53 in. bore and 7.10 in. stroke. It delivers 200 b.hp. at 1700 r.p.m., which is rather low for an engine of this size. The fuel

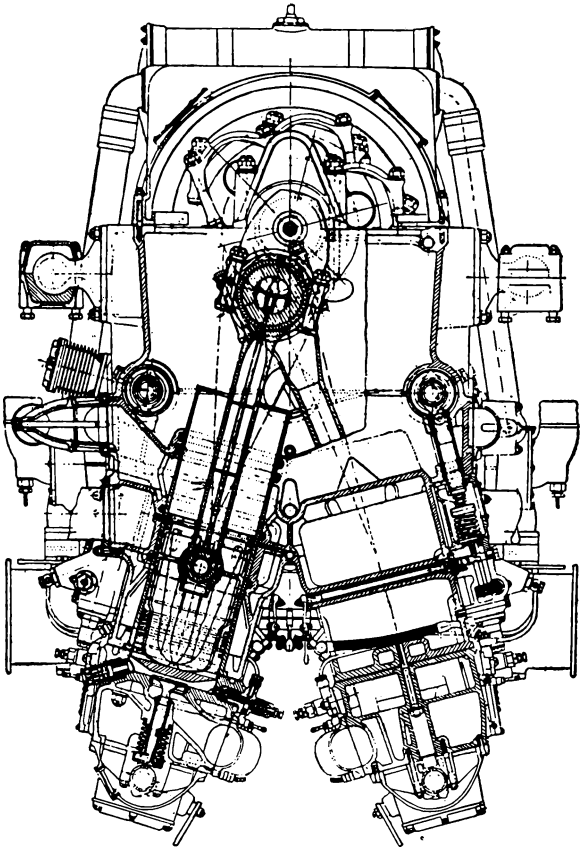

FIG. 243.—Section of the Deschamps Diesel.

consumption is given as 0.41 lb. per b.hp. hr., and the brake-mean-effective-pressure is stated to be 99.5 lb. per sq. in. It would seem that an engine with such high b.m.e.p. should deliver a horsepower with less than 5 inches cubical displacement.

The cylinders are made of forged steel; the sheet-steel water jackets are welded on. The pistons are of aluminum. The cylinders

have 2 inlet and 2 exhaust valves per cylinder, operated by two overhead camshafts. The fuel supply system consists of an individual pump for each cylinder; they are mounted in the rear of the engine in two banks of three-pump units. The fuel is injected into the cylinders by vertically mounted overhead nozzles directing the fuel stream against the piston head. The engine is started by compressed air piped through a distributor to the various cylinders.

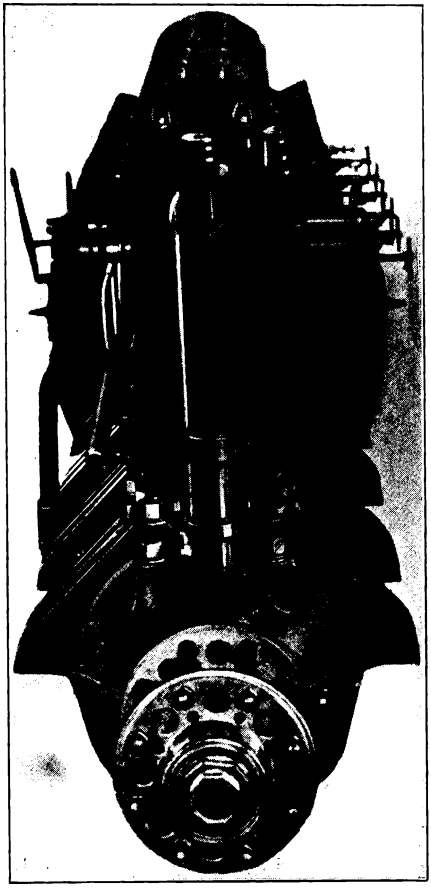

FIG. 244.—Fiat A.N.I. Aviation Diesel.

GARUFFA. The Italian Garuffa Diesel engines are of two types, a 9-cylinder radial water-cooled engine of 300 b.hp. and a 12-cylinder V-type. The former is intended for airplanes, the latter for airships. The 9-cylinder radial engine is shown in Figs. 245 and 246.

The Garuffa engine is of the 2-cycle type, the compression pressure is 450 lb. per sq. in. A 2-stage turbo blower furnishes compressed air to the intake ports uncovered by the piston. The exhaust ports are in front of the engine and are also uncovered by the piston. The fuel is supplied by a circular "common rail" similar to the McKechnie-Vickers system. Fuel is stored in the rail under a pressure of 600 lb. per sq. in., and individual push rods, operated by cams, permit the injection of the fuel. For starting, the engine employs electric spark plugs.

GUIBERSON. The Guiberson aviation Diesel is patterned somewhat after the Packard engine in that but one valve serves the pur-

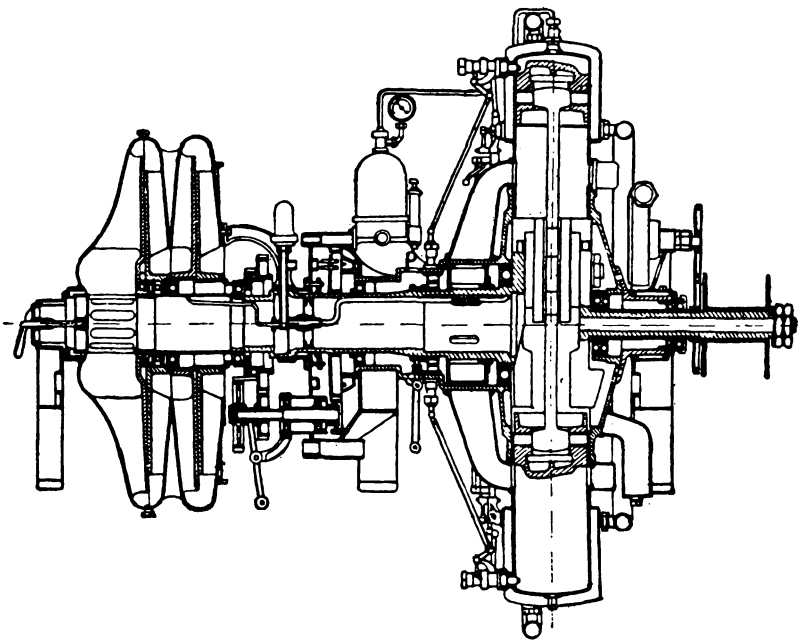

FIG. 245.—300-b.hp. Garuffa Aviation Engine.

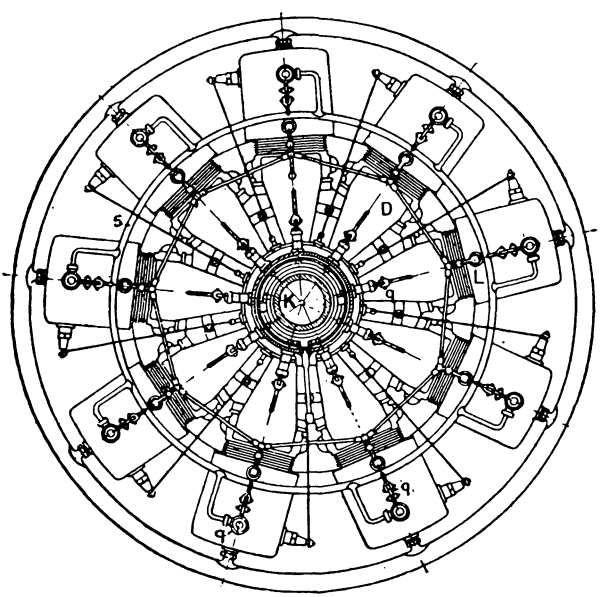

FIG. 246.—Garuffa Diesel Engine.

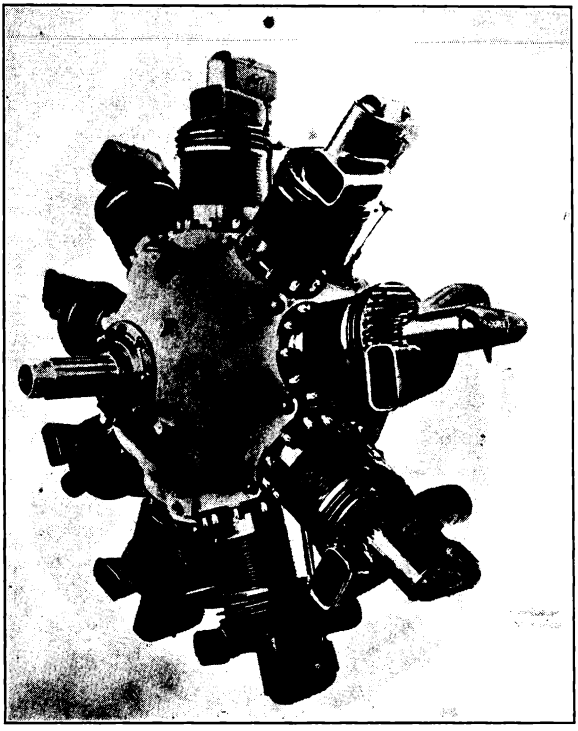

FIG. 247.—Guiberson Aviation Diesel Engine.

pose of both intake and exhaust. Two models of the Guiberson engine have been produced; the type A-980 is shown in Fig. 247.

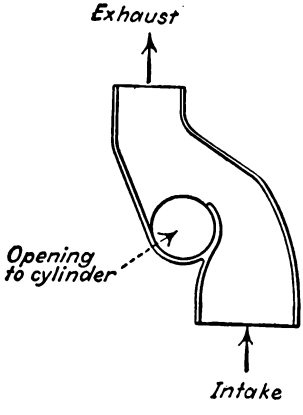

FIG. 248.—Guiberson Intake and Exhaust Nozzle Arrangement.

The nozzle arrangement, as shown in Fig. 248, causes the air to enter the cylinder with a rotary motion which produces good turbulence.

The model A-980 engine is of $4\frac{13}{16}$-in. bore and 6-in. stroke. The power developed is 185 b.hp. at 1925 r.p.m. The engine weighs 509 lb.

JUNKERS. The Junkers Motor Works produce aircraft engines of the opposed-piston type. The largest model, intended for giant air liners and for military trans-

port and bombing planes, is shown in Fig. 249. The general outline seems to be similar to that of the Sterling engine described elsewhere. Details of construction are not available.

In addition to the barrel engine, Junkers produces also several 6-cylinder-in-line engines, following the standard Junkers construction, except that the upper piston is not connected to the (piston-type) compressor. In these engines, the compressor consists of a separate gear-driven blower of the centrifugal type with two-speed

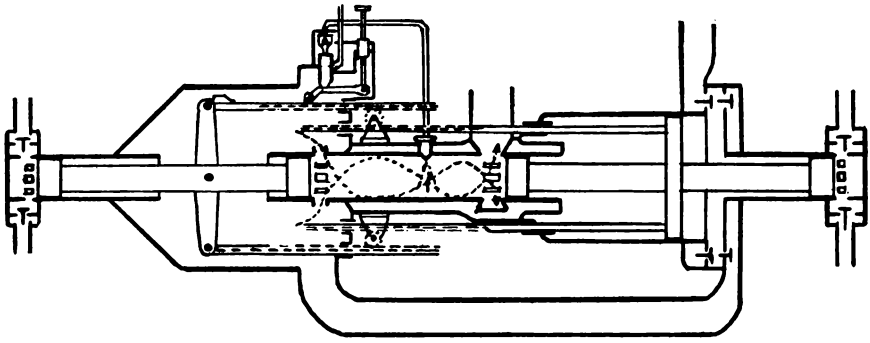

FIG. 249.—Junkers Barrel-type Aviation Engine.

drive. For altitudes not exceeding 15,000 ft. the blower may be driven in "low" gear, requiring 84 hp. at an (engine) speed of 2000 r.p.m. For higher altitudes the blower must be driven in "high" gear, requiring 141 hp. at a crankshaft speed of 2000 r.p.m. The blower has a capacity 1.8 times the cylinder displacement, thus assuring complete scavenging.

The engines of the Jumo 204 and 205 series are of the following dimensions:

Jumo 204

Bore, 4.73 in.; stroke (total), 16.5 in.
Displacement, 1745 cu. in.
750 b.hp. at 1800 r.p.m.
Weight, 1653 lb.
Brake-mean-effective-pressure, 111 lb. per sq. in.
Fuel consumption, 0.35 lb. per b.hp. hr.
Compression ratio, 14 to 1.

Jumo 205

Bore, 4.13 in.; stroke (total), 12.6 in.
Displacement, 1015 cu. in.
600 b.hp. at 2200 r.p.m.
Weight, 1146 lb.
Brake-mean-effective-pressure, 113 lb. per sq. in.
Fuel consumption, 0.36 lb. per b.hp. hr.
Compression ratio, 14 to 1.

Junkers aircraft Diesel engines have been adapted by various air lines in Europe, and they are also being used for military planes, such as bombers and transports. These engines may be mounted

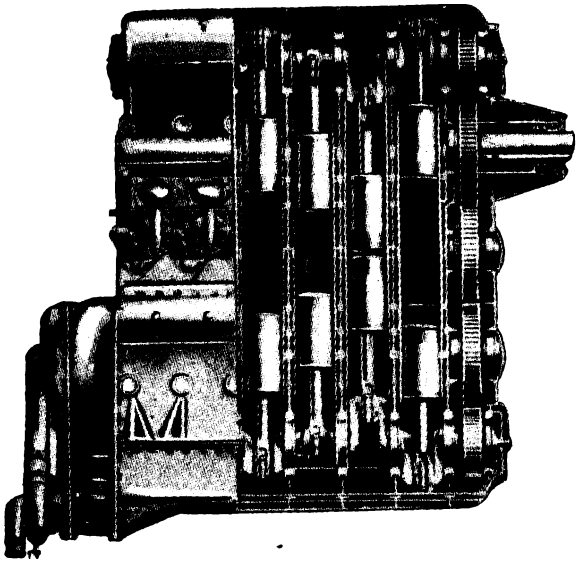

FIG. 250.—Junkers Jumo Aviation Diesel.

with the cylinders either vertical or horizontal, so as to fit into the fuselage or wing structure.

The Junkers Jumo Diesel engines are being built under license by Napier in England as the "Culverin," and by Compagnie Lilloise de Moteurs in France as the "C.L.M. Lillie."

The curves in Fig. 252 show the performance of the Junkers-Jumo Diesel aviation engines. Curve 1, brake horsepower at full

load; curve 2, at part load. Curve 3, torque at full load; curve 4, at part load. Curve 5, fuel consumption at full load; curve 6, at part load.

MAYBACH. The Maybach aviation Diesel engine is intended for lighter-than-air craft rather than for airplanes. The field of

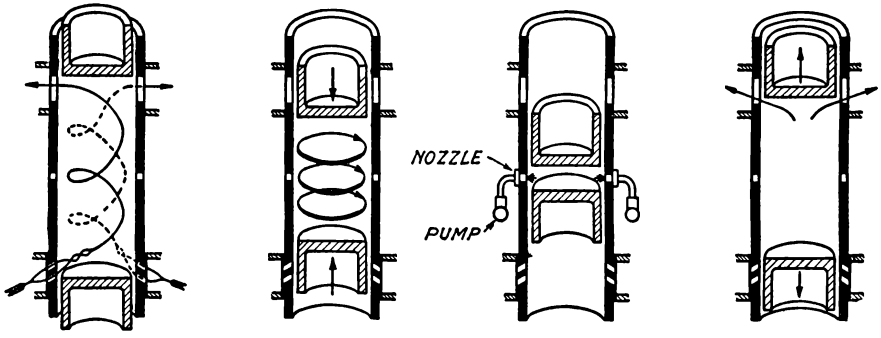

FIG. 251.—Schematic Diagram of Junkers Diesel Engine.

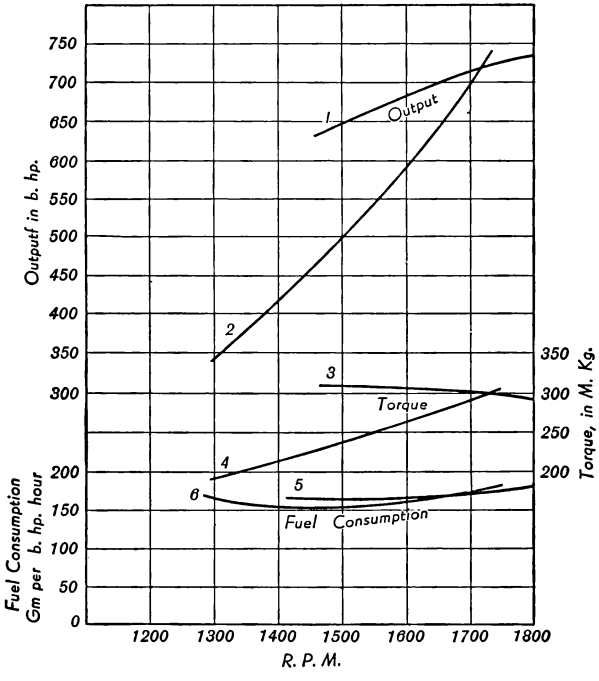

FIG. 252.—Characteristic Curves, Junkers Jumo Diesel.

the Maybach engine is the Zeppelins. The design of this engine is shown in Fig. 253.

The Maybach Diesel is a 12-cylinder V-type engine, the cylinder banks set at the orthodox angle of 60 deg. The combustion chamber used is of the open type, which in this case means that the piston crowns are dished, forming a cavity, and this indentation forms the

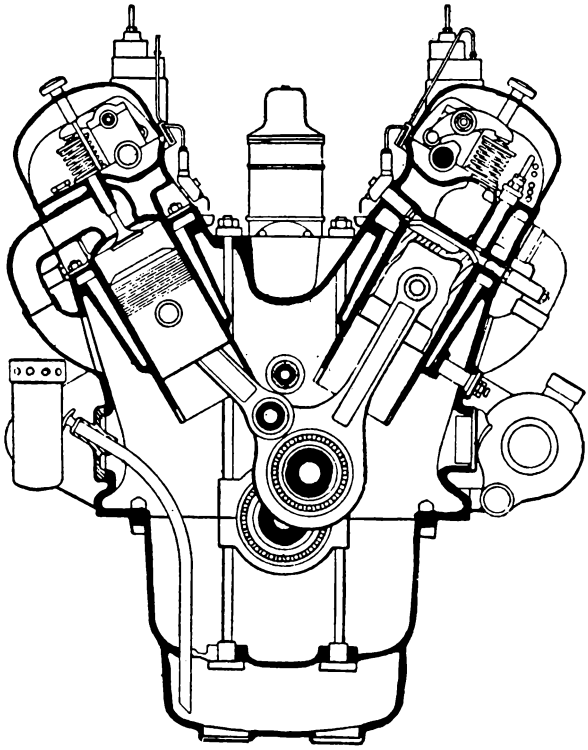

FIG. 253.—Maybach Diesel Engine.

combustion space proper. It is claimed that the very form of the dished piston aids in the creation of turbulence.

The engine is of 5 7/8-in. bore and 7 7/8-in. stroke. The brake horsepower delivered is given as 410 at 1400 r.p.m., which seems rather low indeed. The fuel pump is a Deckel. The injection pressure of the fuel is 10,000 lb. per sq. in. The Maybach is a radically designed engine in some respects; featuring ball-bearings for the master connecting rod as well as for the main bearings, and taking

the intake air from the crankcase rather than direct from the outside.

MERCÉDÈS-BENZ. The Mercédès-Benz Company has produced a very special 16-cylinder Diesel aircraft engine to power giant airliners. The engine is known as the Model LOF-6 and is illustrated in Fig. 254.

These engines were especially designed for the Zeppelin airships, the Von Hindenburg being powered with four of them. The engine has 16 individual cylinders of drop-forged steel, machined in-

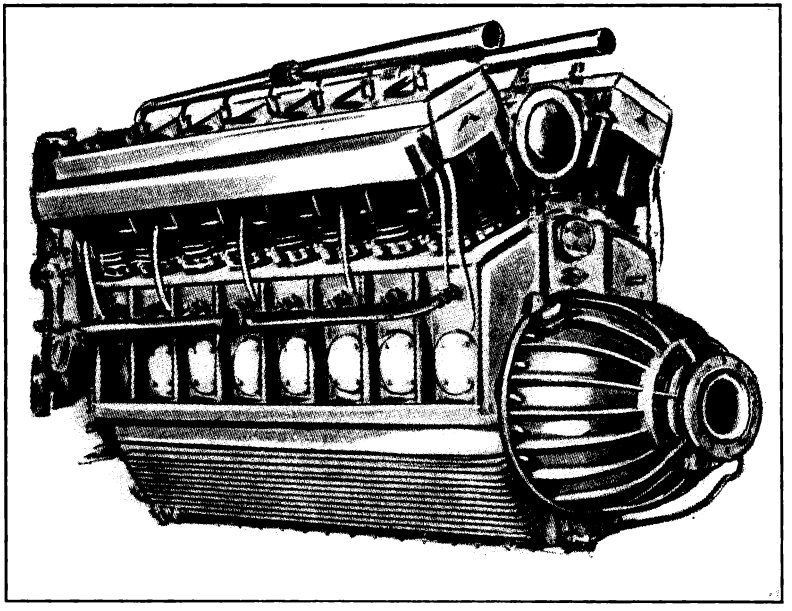

FIG. 254.—Mercédès-Benz Zeppelin Diesel Engine.

side and out. The water jackets are of pressed steel, welded to the cylinder proper.

Customary design would require the cylinders to be positioned at an angle of 45 degrees (between the two banks of 8 cylinders each) so as to have an "even" firing order of 45 degrees between each of the 16 cylinders. But Mercédès-Benz engineers, wishing to avoid any possibility of periodic vibration, set the cylinder banks at 50 degrees in order to secure "uneven" firing sequences; thus the cylinders do not fire 45 degrees apart, the order being alternate multiples of 40 and 50 degrees.

Furthermore, the balanced, counter-weighted crankshaft, held in 9 bearings, is an aid to securing smooth vibrationless engine operation.

The crankcase, both upper and lower halves, is made not of the usual aluminum alloy (spec. gravity, 2.9 to 2.93) but of a special light metal known as Silumin-Gamma (spec. gravity, 2.65), and the pistons are made of still lighter material, Electron Metal (spec. gravity, 1.8).

The engine is fitted with the Mercédès-Benz antechamber. Four valves, 2 intake and 2 exhaust, are provided, the antechamber being located centrally between the 4 valves.

The engine has only natural aspiration, no supercharger being fitted. Supercharging the LOF-6 engine would perhaps increase the brake-mean-effective-pressure by 40 or 50 per cent and hence raise its power output to possibily 1800 b.hp., but "forced performance" is undesirable for Zeppelin airliners.

The specifications of the LOF-6 Diesel engine as as follows:

Bore, 6.89 in.
Stroke, 9.05 in.
16-cylinder V-type, cylinders set at angle of 50 deg.
Displacement, 5.401 cu. in.
Compression ratio, 14¼ to 1.
Compression pressure, 503 lb. per sq. in.
Normal compression temperature, 905° F.
B.M.E.P., 107 lb. per sq. in.
Maximum engine speed, 1600 r.p.m.
Propeller speed, approximately ½ engine speed.
Normal brake horsepower, 1200 at 1600 r.p.m.
Fuel consumption, at full load and speed, 1200 b.hp. at 1600 r.p.m., 0.395 lb. per b.hp. hr. At cruising speed, 900 b.hp. at 1350 r.p.m., 0.373 lb. per b.hp. hr.
Weight of engine, 4320 lb. dry.

Fuel injection is by four 4-plunger type Bosch fuel pumps, arranged in such a way that two pumps can be cut out, allowing the engine to idle on 8 cylinders.

The Mercédès-Benz Zeppelin Diesel engines are reversible, thus permitting the propellers to be used as a brake when landing, or to back the airship in close maneuvering. The standard Mercédès-Benz reverse mechanism is shown in Fig. 255.

The reversing shaft proper *a* is turned on its axis for approximately 270 degrees by means of the geared-down handwheel *b*. Shaft *a* actuates the crank *c* to which the connecting rod *d* is attached; this in turn operates the valve lifter shaft *e*. The intake and exhaust valve lifting levers rest upon the eccentric *f*, which can

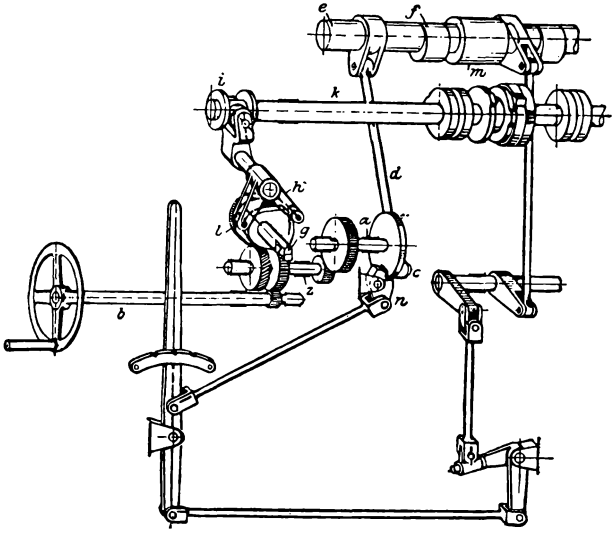

FIG. 255.—Reversing Mechanism.

be raised to its highest point by means of shafts *a* and *e*. The levers for the fuel and (air) starting valve rest upon the eccentric *m*, which is operated by the large starting lever. The latter is held by a segment having three notches—the center one for starting, the other two for forward and reverse speed respectively. The block *n*, operated by the starting lever, locks the handwheel, thus making the reversing mechanism inoperative while the starting lever is set for forward or reverse operation of the engine.

Only when the starting lever is in starting position (vertical position, center notch) can the handwheel be turned for either forward

or reverse movement of the engine. The shaft *a*, by means of the intermediate shaft *z*, operates the shaft *g* carrying the cam *l*, which raises or lowers the lever *h*, connected to the same shaft as the fork *i*. The latter moves the camshaft *k* inward or outward. Since there are two cams for each valve-lifter lever, either one may be brought into contact, thus giving the engine either forward or reverse movement.

In actual running operation, only the engine camshaft *k* revolves, all the other shafting remaining idle. Reversing can be accomplished

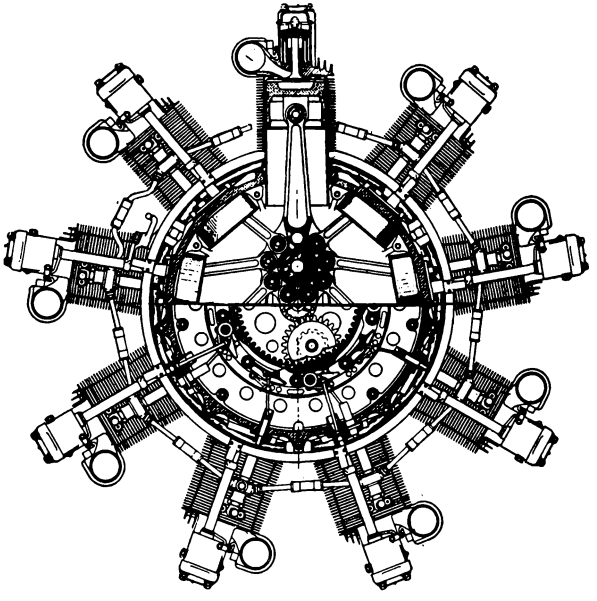

FIG. 256.—Rear View, Packard-Diesel Engine.

only after the starting lever is set in the starting position. In this position, the valve-lifter levers are lifted clear of the cams; the camshaft may now readily be moved back and forth, the fuel supply is also cut off.

The reversing mechanism of the LOF-6 engine is operated by compressed air instead of by a handwheel. The construction details of this new mechanism are not for publication.

Lower powered Mercédès-Benz aircraft Diesel engines are being built along this same general design for transport airplanes.

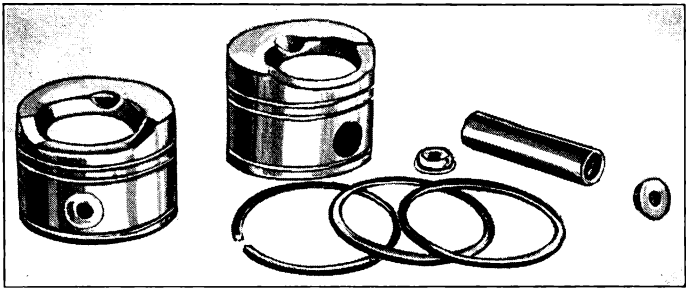

FIG. 257.—Packard Piston Design.

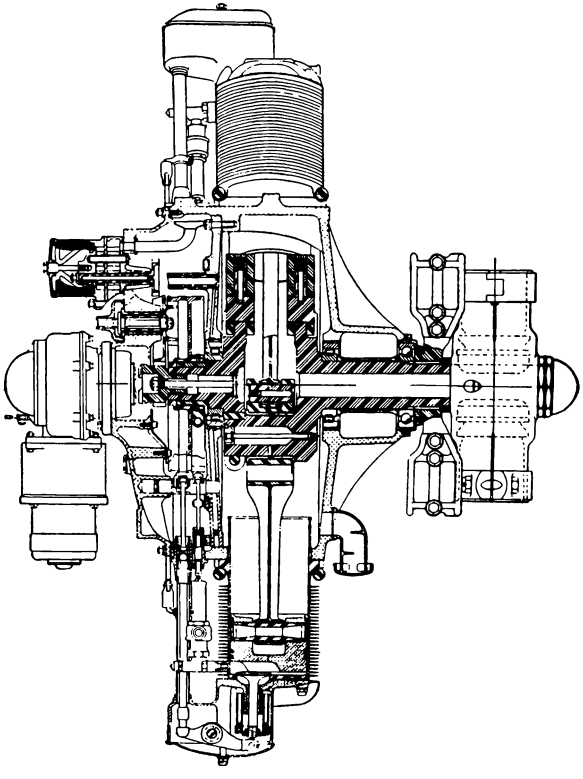

FIG. 258.—Side View of Packard Diesel Engine.

PACKARD. The Packard Motor Company of Detroit, Michigan, builder of the Packard-Diesel aircraft engine, was the first American manufacturer to feature a Diesel engine for airplane use. The engine is of the 9-cylinder radial type, air-cooled; with a bore of $4\frac{13}{16}$ in. and a stroke of 6 in. The piston displacement is 980 cu. in. and the weight is 510 lb. The engine is rated at 225 b.hp. at 1950 r.p.m. The fuel consumption is 0.40 lb. per b.hp. hr.; the oil (lubrication) consumption is 0.035 lb. per b.hp. hr.

The Packard engine has a single valve, acting both as an intake and as an exhaust valve. There is a cam-operated fuel injection pump for each cylinder. The combustion chamber is of the open type, i.e., a recess in the piston head as shown in Figs. 256 and 258.

The pistons are of an aluminum alloy with 4 rings, 2 double-seal compression rings and 2 oil rings. Finned aluminum caps are bolted to the flat steel cylinder heads for cooling; the cylinder barrels and heads are machined from steel ingots. The compression ratio of the Packard Diesel is 16 to 1, equivalent to a compression temperature of almost 1000° F. The brake-mean-effective-pressure is 92 lb. per sq. in. The propeller is driven through a flexible rubber mounting. The equipment includes self-starter, generator, and tachometer drive.

The Packard Company has made extensive test flights comparing Diesel with gasoline engines. The ceiling of a Diesel-powered plane exceeds that of a gasoline-engined one by 50 per cent, neither engine being supercharged, which is a feature of prime importance.

CHAPTER 12

MEDIUM- AND LOW-SPEED DIESEL ENGINES

Marine Diesels. The Diesel engine has long since found favor and wide acceptance in the marine field, partly because it eliminates the danger of fire, but mainly because this type of engine is not affected by water spray, dampness, and other conditions that may affect the electrical ignition system of gasoline engines.

The cheapness of Diesel fuel oil may also be a consideration, but it is mainly the Diesel engine's superior torque and performance that makes the use of this type of engine so desirable.

Next to aviation service, marine service is the most exacting. The engine is under constant load, and repairs cannot conveniently be made while the boat is out on the water and away from service facilities; hence reliability, simplicity, and freedom from ignition failures are of prime importance.

Excessive flexibility, so much in demand with automobile engines, is not needed in marine service; reliability and sufficient power constitute the fundamental demands.

Railcar and Locomotive Diesels. During the last twenty years there has been a gradually increasing use of Diesel engines in the railway field for (a) small railcars on short runs where the loads are light, (b) switching locomotives where the operating cost of the Diesel engine is very advantageous, and (c) streamlined trains for longer distances at high speed. Great strides have been made in this latter field in the last few years, but the exacting service has caused many difficulties.

A large number of the manufacturers of automotive Diesel engines also make engines for marine and railcar service. No attempt will be made here to show or discuss those types that have already been shown.

ATLAS. For years the Atlas Imperial Diesel Engine Company has built Diesel engines for marine and stationary service, using the conventional common-rail injection system.

A section of one of these engines is shown in Fig. 259. The cylinders are cast individually with integral water jackets. The inlet and exhaust valves are mounted in removable cages in the individual cylinder heads. These engines are built in various sizes ranging from 6½-in. bore and 8½-in. stroke, to 14-in. bore and 18-in. stroke.

The fuel injection is controlled by the conventional wedge (1132) between the tappet and the injector push rod.

Their smaller engines use their Atimco injection system, already described. They are built in 4¾-in. bore by 6½-in. stroke, and 6-in. bore by 8-in. stroke. Both engines operate at 1000 r.p.m. The upper half of the crankcase and cylinder block are cast integral for these small engines.

BUCKEYE. The Buckeye Machine Company builds stationary Diesel engines of from 20 to 65 b.hp. per cylinder.

These engines are built in units of from 2 to 8 cylinders. A cross section of one of the engines is shown in Fig. 260.

Individual Bosch injection pumps and multi-hole nozzles are used. A conventional open combustion chamber is used with a cupped piston head. The upper crankcase and cylinder block is a unit casting on all engines.

The structure carries an additional wall surrounding the water jackets. On one side of the engine this provides a space for enclosing the injection pumps, piping and controls while the intake air is taken from the space on the opposite side. This presents a method of continuous ventilation for the crankcase. Special cast-iron cylinder sleeves, and aluminum alloy pistons are used.

A fuel consumption of 0.4 lb. per b.hp. hr. is obtained at full load.

The hand-control lever is locked in the running position by the combined pressures of the cooling water and the lubricating oil. If either pressure should drop to a dangerous value, the engine will be automatically shut down.

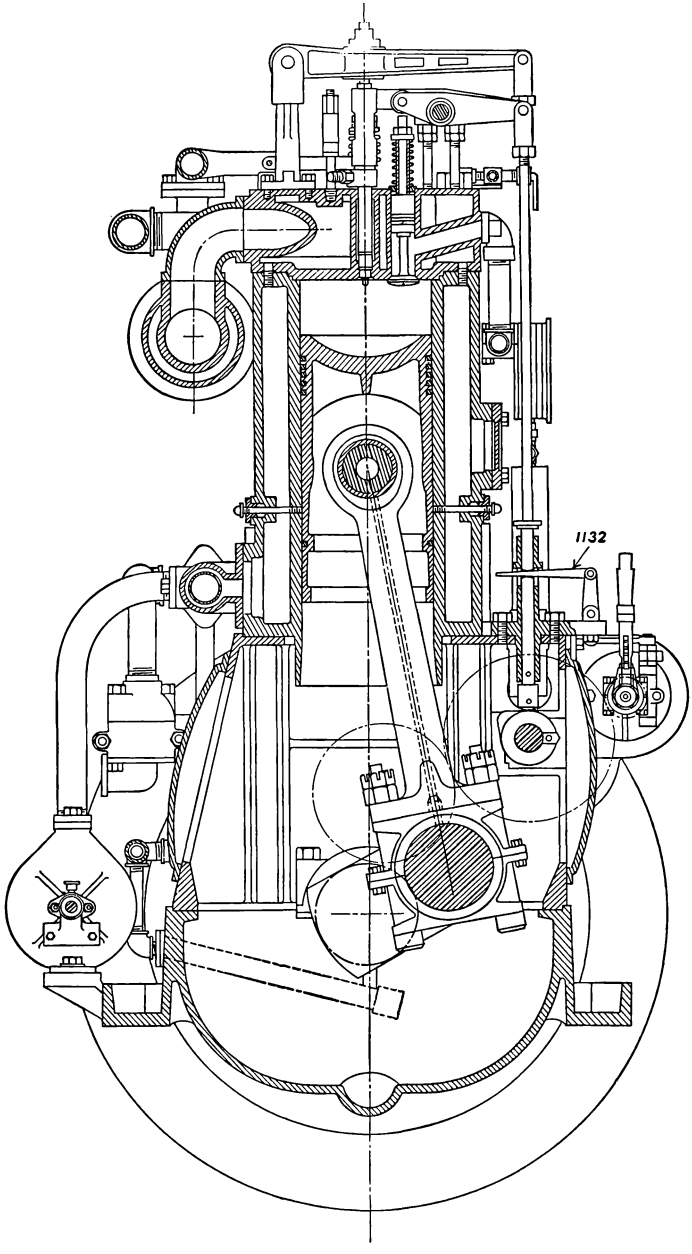

FIG. 259.—Atlas Imperial Common Rail Diesel.

BUSCH-SULZER. The Busch-Sulzer Diesel Engine Company was the first manufacturer of Diesel engines in the United States. They are now manufacturing two- and four-cycle stationary engines, and have developed a line of two-cycle railway engines of from

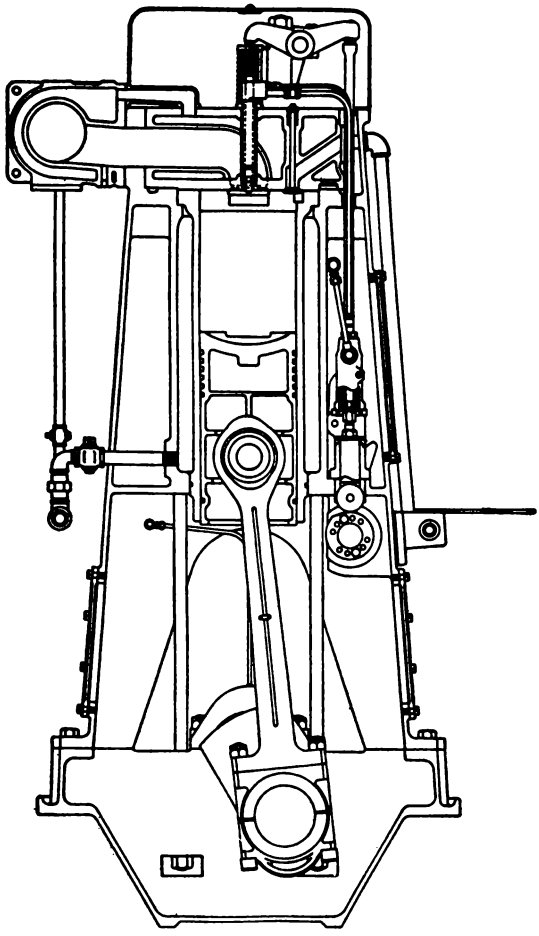

FIG. 260.—Buckeye Diesel Engine.

1200 to 3600 b.hp. Until 1913 they worked under the direction of Dr. Diesel, and until 1926 with the technical collaboration of the Swiss firm of Sulzer Brothers.

Although most of their present engines are of the two-cycle type,

Fig. 261 shows the general construction of their four-cycle engines, which are built in three- to eight-cylinder sizes of 75 to 125 b.hp. per cylinder. These engines operate at 360 and 300 r.p.m., respec-

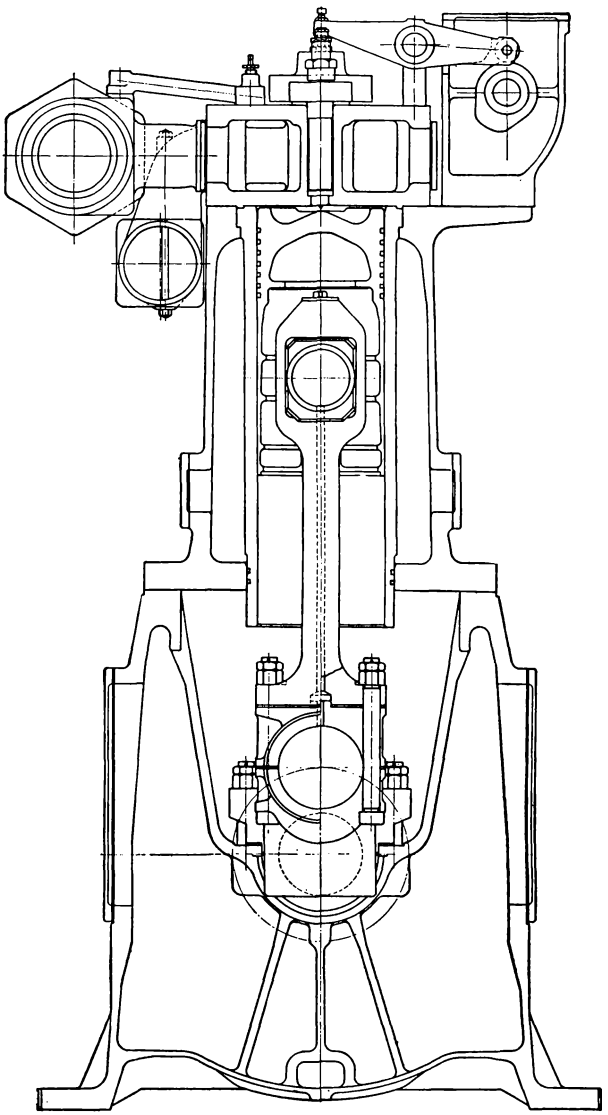

FIG. 261.—Busch-Sulzer 4-Cycle Diesel Engines, Types DF and DB.

tively. They use the A.E.G. Hesselman mechanical injection system. Busch-Sulzer builds stationary engines of the two-cycle type using cylinders developing 300 to 650 b.hp. per cylinder. A section of these engines is shown in Fig. 262. On this engine there are several things worthy of note:

(a) The combustion chamber is open and somewhat of a doughnut shape, being formed between the piston and cylinder heads.
(b) The trunk type of piston, which is discussed later in this text.
(c) The sludge chamber, which enables the operator to see the condition of each piston at a point between the cylinder and the crankcase. This chamber prevents any piston leakage reaching the crankcase.
(d) The double-ported air-inlet with a check valve on the upper inlet ports which holds them closed during the exhaust period, but allows air to enter as soon as the pressure in the cylinder is below the pressure of the incoming air. This allows air to enter the cylinder as long as the scavenging air pressure is above the cylinder pressure. Thus the upper set of air ports function part of the time that they are uncovered, and have the tendency to supercharge the cylinders slightly. The scavenging air is supplied by centrifugal blowers.
(e) The connecting rods are 5¼ times the crank throw in length, thus giving a low piston side force.
(f) These engines are built in units of 5 to 11 cylinders each.

One of the latest Diesel engines built for railway service is that shown in Figs. 263 and 264. This two-cycle engine is of the ten-cylinder V-type with 14-in. bore and 16-in. stroke. It is said to be conservatively rated at 2000 b.hp. at 550 r.p.m. It employs the same general principles of construction as the large stationary Busch-Sulzer engines, such as the double-ported intake and the long trunk-type pistons.

The scavenging air is supplied by gear-driven, Roots-type blowers which are mounted across the top of the v between the two banks of cylinders. The v opening is utilized as a receiver for the scavenging air. The engine, as built for the Illinois Central

Railroad, weighs 36 lb. per b.hp. but can be built with a weight of 23 lb., where service necessitates lower weight.

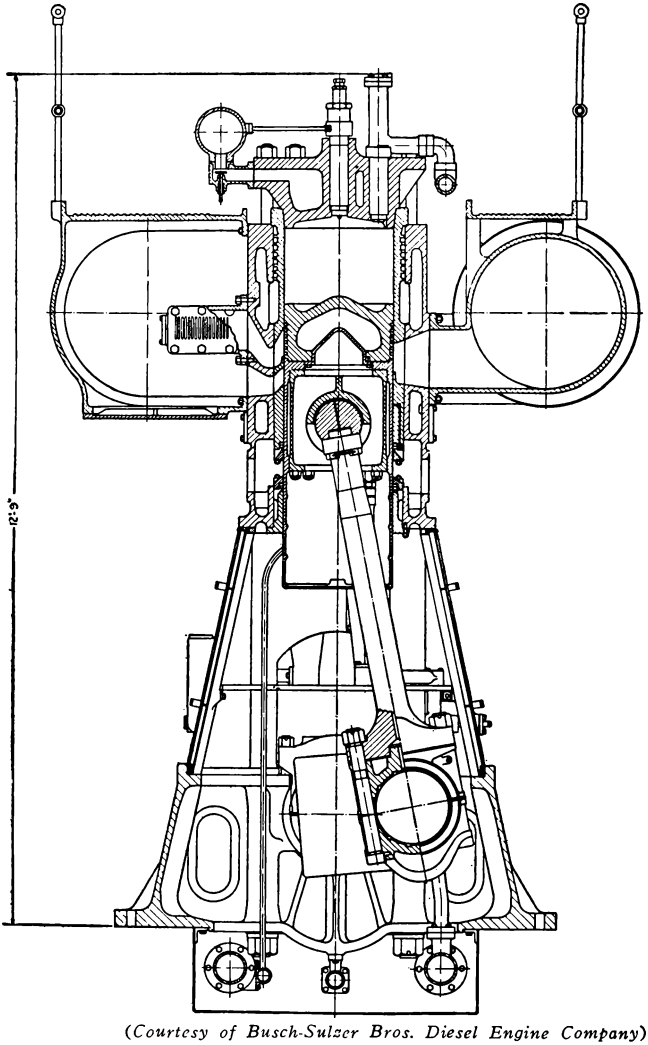

(Courtesy of Busch-Sulzer Bros. Diesel Engine Company)

FIG. 262.—Busch-Sulzer Diesel Engine. Two-Cycle Stationary, 300 B.hp. per Cylinder.

The engine crankcase and cylinder jackets for the entire engine are made in one casting. An upper and lower cylinder liner are used, with the sludge chamber between them.

The engine is protected by the lubricating oil pressure, which must be 12 lb. or over to allow the injection pumps to function. This pressure must be built up before the engine will start. The novel construction of the upper portion of the cylinder and the head should be noted.

CHICAGO PNEUMATIC. The Chicago Pneumatic Tool Company make four-cycle stationary Diesel engines of 50 and 100 b.hp. per cylinder. They are built in units of from two to eight cylinders.

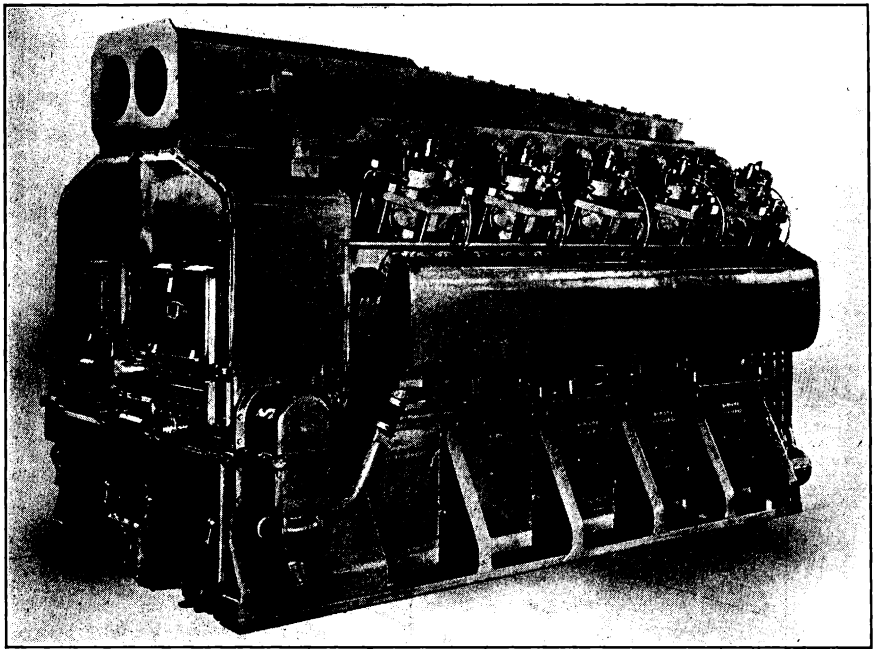

FIG. 263.—Busch-Sulzer Locomotive Diesel.

These engines use individual Bosch injection pumps and multi-hole nozzles. The combustion chamber is contained, for the most part, in the cupped piston head. The cylinder jackets and crankcase are cast in units of two or three cylinders and are bolted together in the multi-cylinder engines. This assembly is then bolted to the one-piece lower crankcase casting.

The valve timing of these engines is shown in Fig. 265. The

timing diagrams are conventional and are shown here to point out the variation with engine speed.

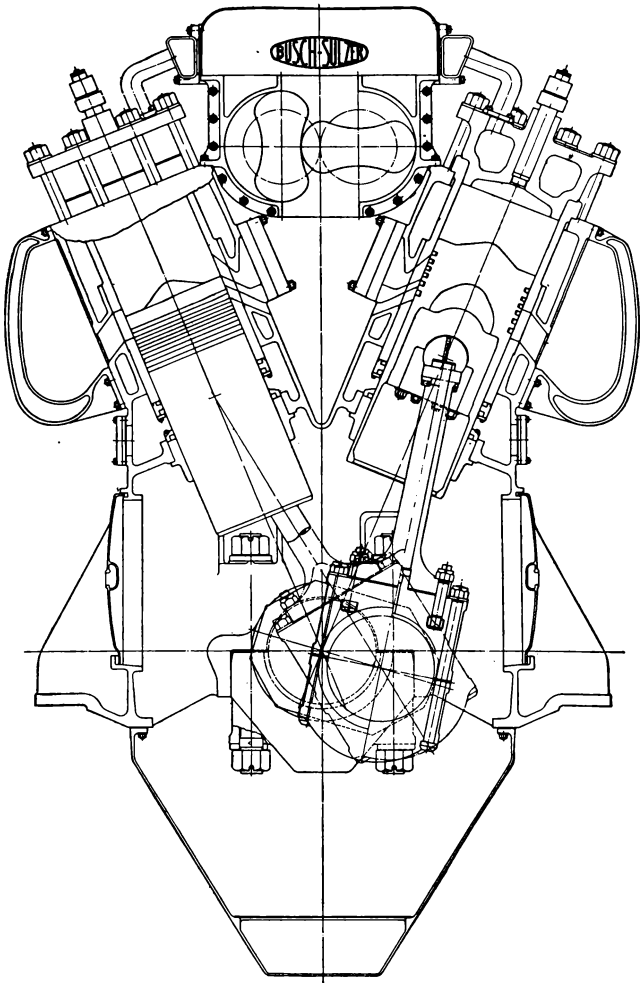

(Courtesy of Busch-Sulzer Bros. Diesel Engine Company)

FIG. 264.—Busch-Sulzer Locomotive-Type Diesel Engine.

COOPER-BESSEMER. For years the Cooper-Bessemer Corporation has manufactured "Common Rail" Diesel engines. Their present engines use an improved injection system which is explained in Fig. 267.

These engines are built for marine, locomotive and stationary service in units of 3, 4, 6 and 8 cylinders, developing 50 to 112 b.hp. per cylinder at speeds of 900 to 375 r.p.m. They all use open combustion chambers with a half-doughnut shape hollowed out of the piston head. The unit-cast cylinder jackets are fastened to the one-piece crankcase by large through studs that extend through the cylinder heads. The cylinder heads are held to the cylinder sleeves by a separate set of studs.

The pistons are made of either nickel iron or aluminum alloy, depending upon the speed of operation and service conditions of

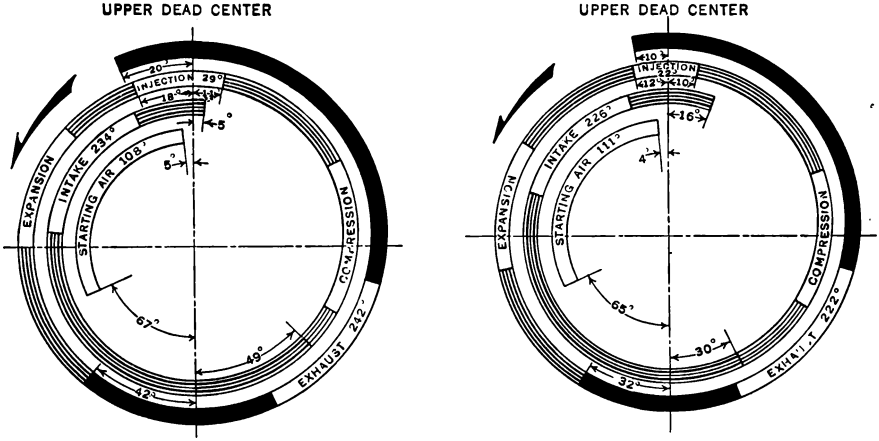

FIG. 265.—Valve Timing Diagram, Chicago Pneumatic Diesel.

the engine. The piston pin construction provides for abnormal bearing area by having the connecting rod bolted to the pin rather than have the pin pass through the rod. This is explained more fully later.

In Fig. 268 is shown a Cooper-Bessemer locomotive Diesel engine built for switching service. The cylinders have 10½-in. bore and 12-in. stroke. The eight-cylinder engine develops 660 b.hp. at 750 r.p.m. This piston speed of 1500 ft. per min. is thought to be near the maximum allowable for continuous heavy-duty service. The 2 four-cylinder injector blocks can be seen mounted on the side of the cylinders.

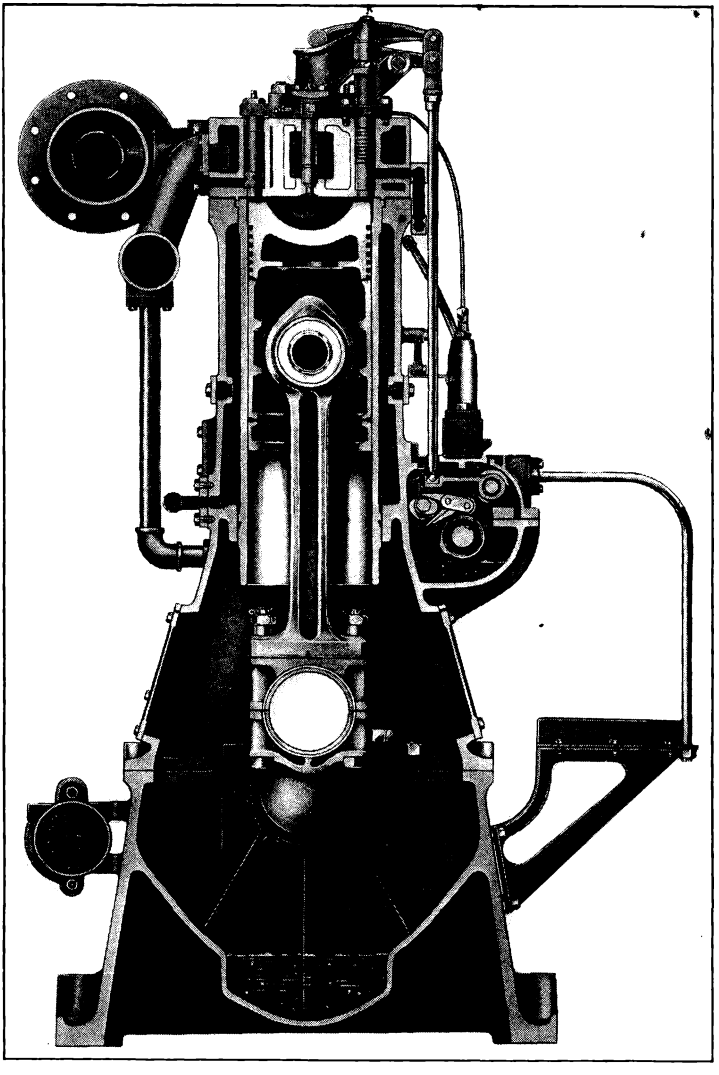

FIG. 266.—Chicago Pneumatic RHB-50 Diesel Engine.

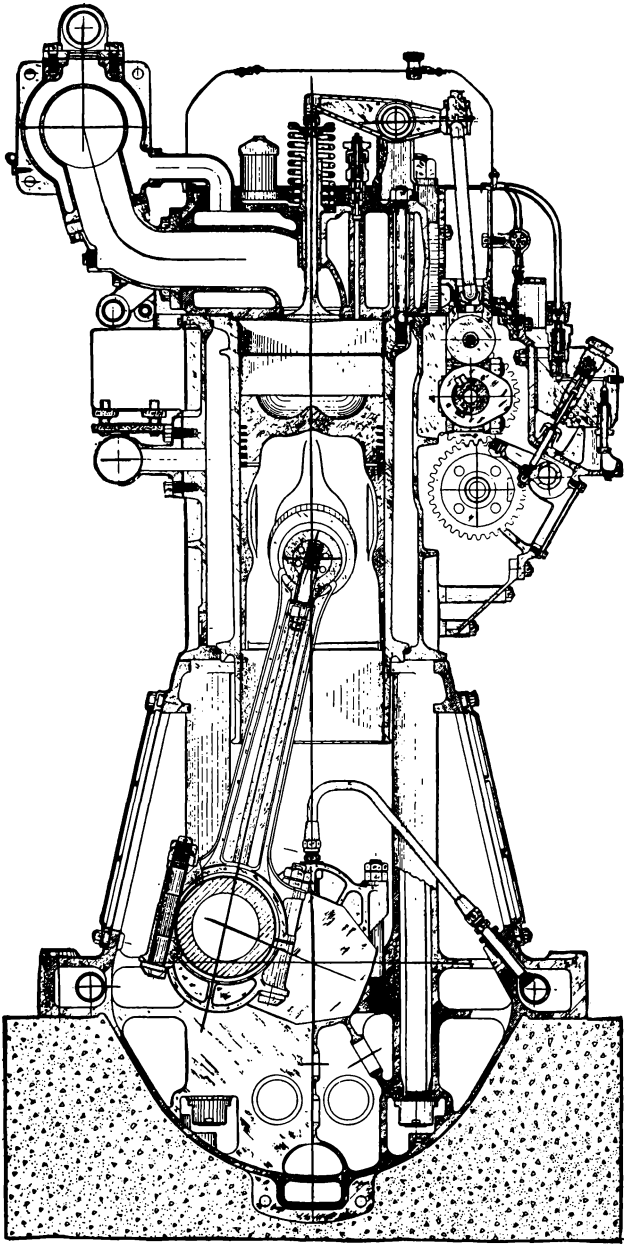

FIG. 267.—Cooper Bessemer Diesel Engine, Type EN.

A smaller Cooper-Bessemer Diesel of 5½-in. bore and 7¾-in. stroke develops 22½ b.hp. per cylinder as 1200 r.p.m., Fig. 269. It follows the same principles of construction as their larger engines except that Bosch fuel pumps and Bosch type nozzles are used. Another variation is shown—the main bearings are held by the through bolts. The bearing caps may be removed by running the nuts and lock nuts up the bolt stems.

The crankshafts of all Cooper-Bessemer Diesel engines have diameters of 65 to 70 per cent of the cylinder bore.

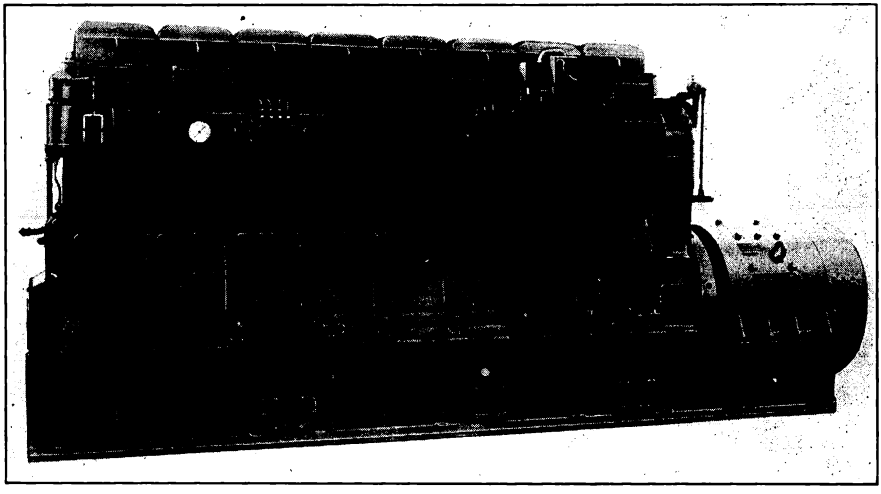

FIG. 268.—Cooper-Bessemer Locomotive Diesel.

GENERAL MOTORS. General Motors have entered the Diesel field with a line of medium speed two-cycle engines, known as model 71. The engines are of 4¼-in. bore and 5-in. stroke, ranging from 1 to 6 cylinders in-line. The engines develop 15 hp. per cylinder at the normal speed of 1200 r.p.m.

These engines operate upon the so-called uni-flow system, i.e., the air enters at ports uncovered by the piston and the exhaust gases escape via two popped valves located within the cylinder head. The valves are operated by rocker arms and push-rods. The fuel injection nozzle is also operated by a push rod driven from the camshaft mounted high upon one side of the cylinder block. The cross

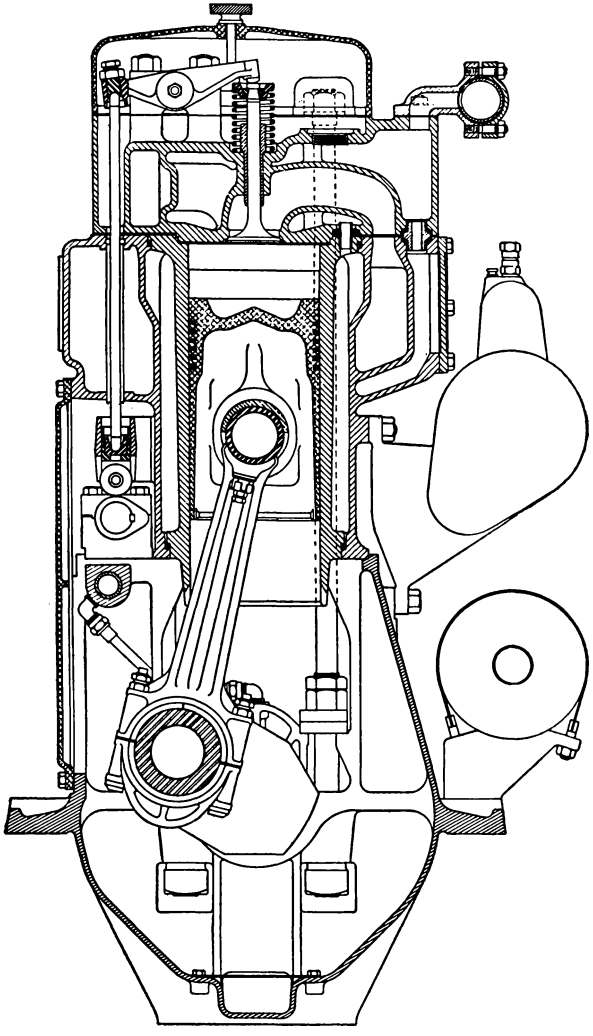

FIG. 269.—Cooper-Bessemer Diesel Engine, Type BN.

section of the General Motors model 71 engine is shown in Fig. 270.

The blower furnishing compressed air to the ports is located on the side of the engine. The blower is of the rotary type; it is not

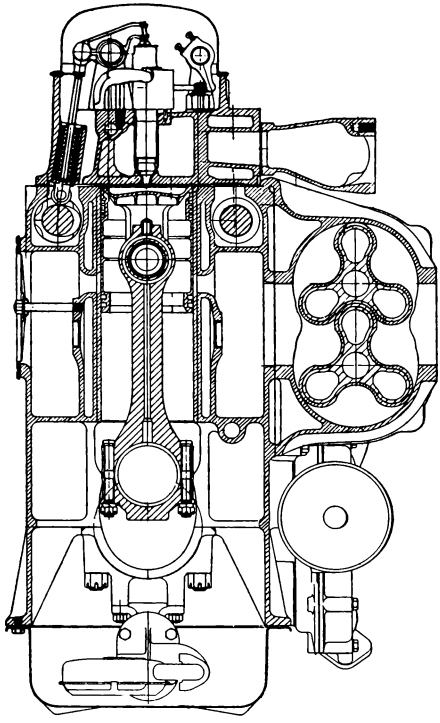

FIG. 270.—Lateral Cross-section of General Motors Model 3-71 2-Cycle Diesel Engine.

the customary Roots type two-lobe blower, but rather a three-lobe blower.

All model 71 General Motors Diesel engines are alike except for the number of cylinders. They are built with one, three, four and six cylinders. A longitudinal section is shown in Fig. 271.

These engines are intended for mass production, and may be used for stationary purposes as well as for marine application. They serve a field where power outputs from 15 hp. to 90 hp. are required.

The engines are balanced by means of a balancer shaft loaded with counter weights. The balancer shaft is mounted high up on the cylinder block directly under the exhaust ports and opposite the camshaft. Both the camshaft and balancer shaft are gear driven

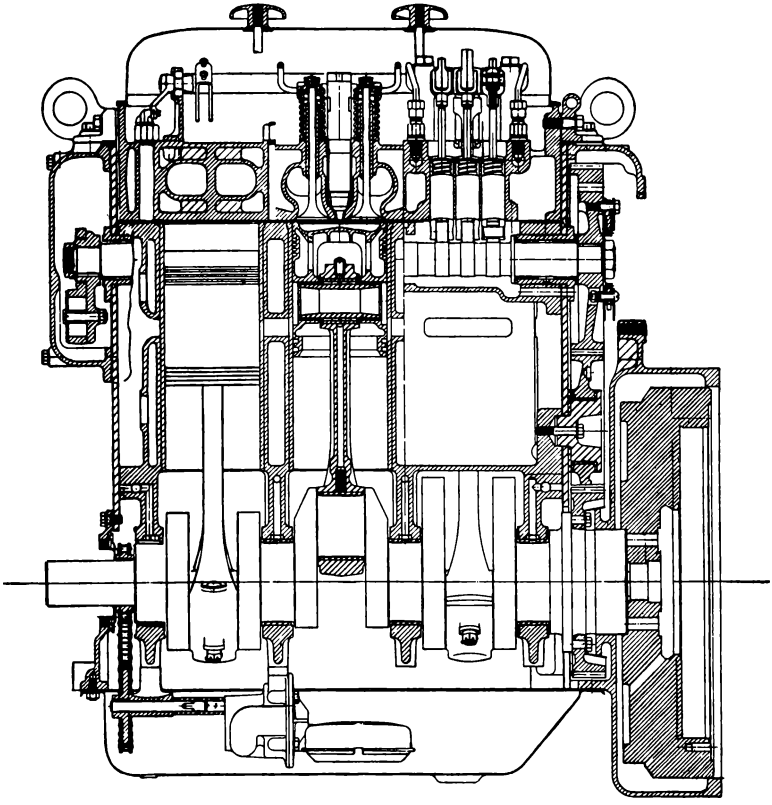

FIG. 271.—Longitudinal Cross-section of General Motors Model 3-71 2-Cycle Diesel Engine.

from the crankshaft. The fuel injection method is the modified Winton system described elsewhere.

HILL. The Hill motorboat engine is of the single cylinder opposed piston type, using rocker arms to actuate the crankshaft by means of twin connecting rods, Fig. 272.

This novel opposed-piston engine is of but midget size; the bore is 2½ in., the stroke 3½ in. for each piston; hence a total effective

stroke of 7 in. The Hill engine features an ante chamber, which is unorthodox insofar as opposed piston engines are concerned. In this type of engine it is customary to inject the fuel directly into the open combustion chamber rather than into an ante chamber. The rocker arm construction is also unusual for this type of engine, as is also the horizontal layout of the engine. Opposed-piston type engines are usually of the vertical or barrel type.

The compression ratio is 15 to 1; the total cylinder displacement is but 37 cu. in., for which a power output of from 10 to 15 b.hp.

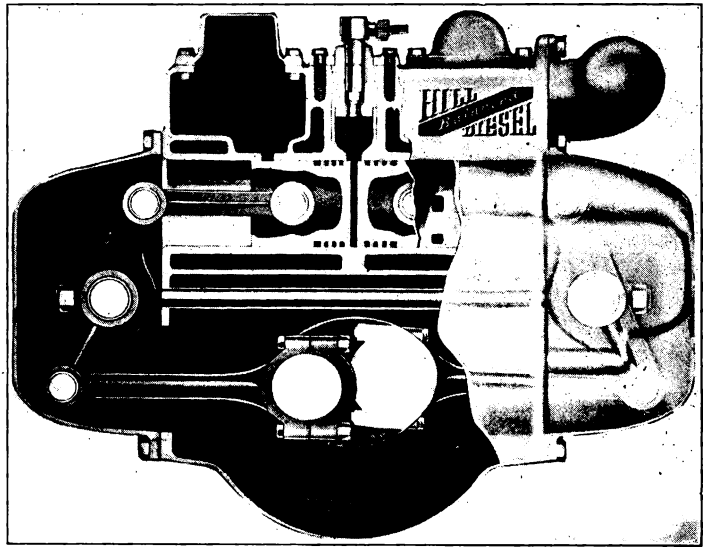

FIG. 272.—Hill Opposed-Piston Diesel.

is claimed. The speed is from 1200 to 2000 r.p.m., which, while not showing great flexibility, is sufficient for ordinary marine operation.

INGERSOLL-RAND. Ingersoll-Rand enjoys the distinction of building the first American Diesel-electric locomotive. It was built in 1924 for switching service, and was very similar to those being built today. This company builds Diesel engines for stationary and railway service.

The Type S Ingersoll-Rand Diesel Engine is shown in Fig. 273. This engine has a 10-in. bore and 12-in. stroke and is built in three,

four, five, six and eight cylinders. It develops 150 to 460 b.hp. at 600 r.p.m.

The cylinder jackets and upper crankcase are an integral casting, which is mounted on a cast iron base. Inspection doors are provided in both the upper and lower crankcase, since the main bearings are carried by the upper crankcase.

The cylinder liners are provided with three packing rings at the bottom and a groove above the bottom ring, which is vented to the atmosphere. This provides an outlet for any water that might leak past the two upper rings and prevents it entering the crankcase. The upper part of the cylinder liner is provided with an extra flange so that, when it is inserted into the cylinder, a restriction is offered to the water flow. The water enters at the bottom of the jacket with a tangential flow and can then be made to pass these restrictions at certain points, *"A"* Fig. 273, thus passing around the top of the cylinder at high velocity.

The cast-iron pistons are equipped with the conventional baffle which prevents lubricating oil from being thrown against the under side of the pistons, thus protecting the lubricating oil as well as allowing the piston head to operate at a higher temperature. The piston head has an elliptical recess designed to prevent the fuel sprays from coming in contact with it.

The Ingersoll-Rand fuel system is shown in Fig. 273A. Bosch-type individual fuel pumps are used in conjunction with two open-type nozzles per cylinder, mounted on opposite sides of the cylinder. These nozzles are single-hole and are fitted with two check valves each. This engine has a fuel consumption of 0.37 lb. per b.hp. hr.

Another unusual point of construction used is the counter-balanced crankshaft in an engine of this speed, also an adjustable idler gear is placed between the camshaft and crankshaft gears, and provision is made for directing the water flow across the valve seats.

NELSECO. The Electric Boat Company are builders of "Nelseco" Diesel engine for marine and stationary service. In Fig. 274 is shown a sectional view of their type AMI engine. The four sections of the engine, base, case, block and head, are tied together by through-bolts with the main bearings located in the base, or lower half of the crankcase. A conventional open combustion chamber is

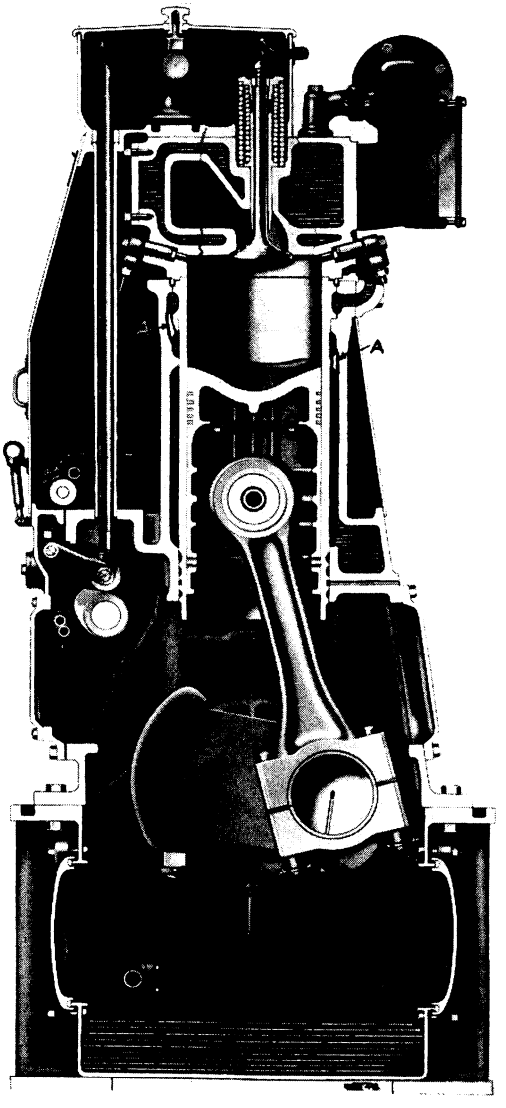

FIG. 273.—Ingersoll-Rand Diesel Engine, Type S.

used and the aluminum alloy piston *A* carries a shield so as to retain heat and protect the lubricating oil. The engine camshaft *H* operates the individual fuel pumps as well as the intake and exhaust valves, and the air-starting valve.

The fuel injection is controlled by the governor or hand lever through an accentric control of a by-pass valve. The injection is through a multi-hole open nozzle.

As can be seen in Fig. 276, the cylinder sleeve is not packed at

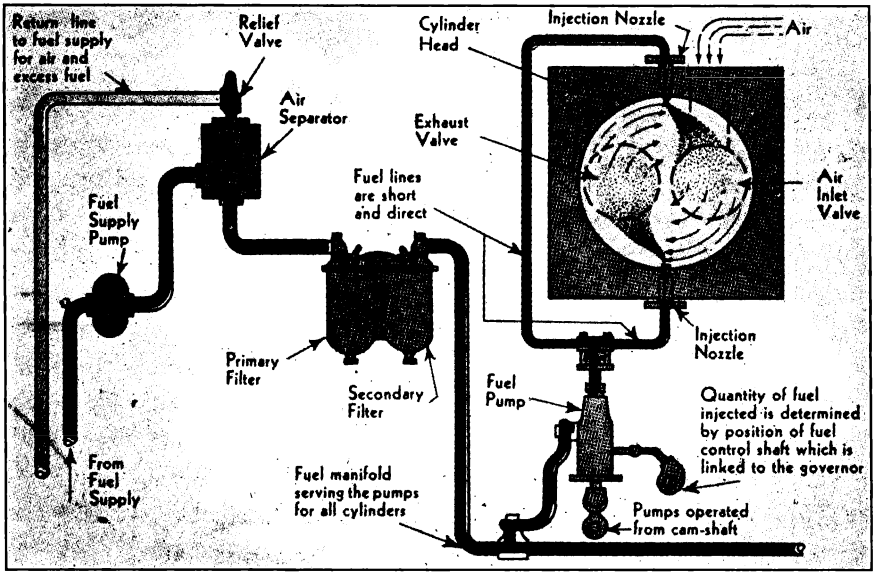

FIG. 273A.—Ingersoll-Rand Fuel System.

the lower gasket by a conventional non-adjustable rubber ring, but by a rubber gasket, a steel ring and a series of cap screws.

SUPERIOR. The National Supply Company's Superior line of Diesel engines includes several sizes of common-rail medium-speed engines and one size high-speed engine using a Bosch injection system. All sizes are built for either marine or stationary service.

One of the Superior Diesel engines using the common-rail injection system is shown in Fig. 275. These engines are built in units of 3 to 8 cylinders. For marine service, the 5, 6 and 8 cylinders are direct reversing. The cylinder sizes of this type are 7-in. bore by

9-in. stroke, and 9-in. bore by 12-in. stroke. These are rated at 22.5 b.hp. at 700 r.p.m., and 43 b.hp. at 600 r.p.m., respectively,

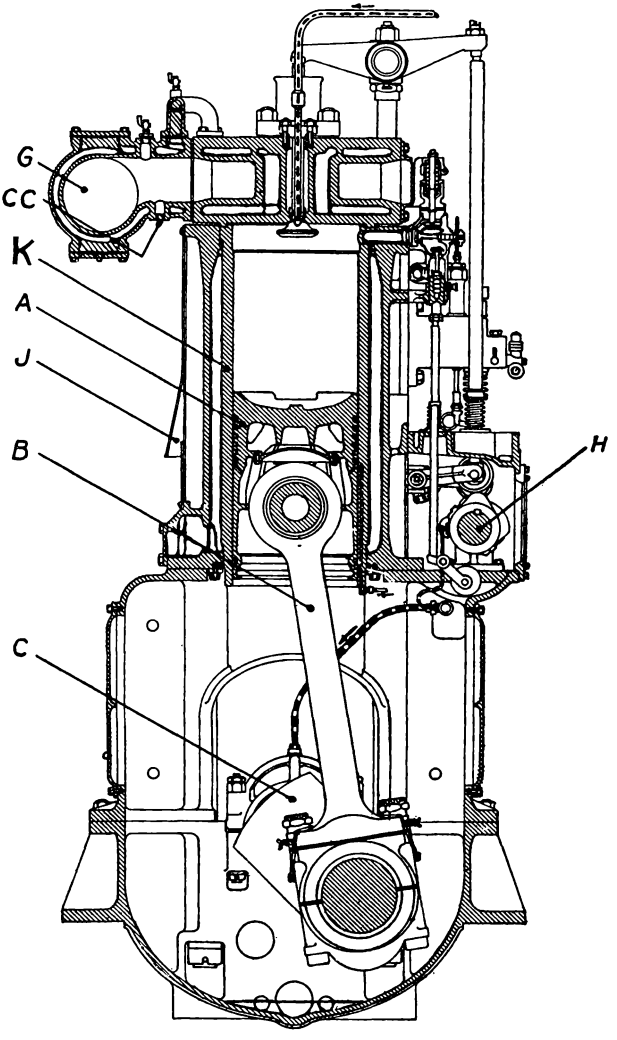

FIG. 274.—Nelseco Diesel Engine, Type A.M.I.

per cylinder. However, the maximum outputs are 30.5 and 57 b.hp., respectively. The rated horsepower figures are based on a b.m.e.p. of 74 lb. per sq. in.

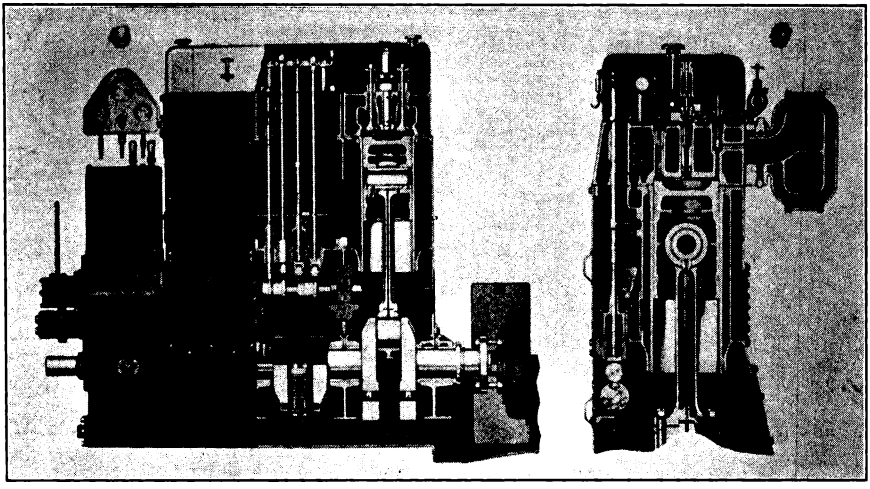

FIG. 275.—Superior Common-Rail Diesel Engines.

The multi-hole injection nozzle is located in the center of the cylinder head. It is operated from the engine camshaft and con-

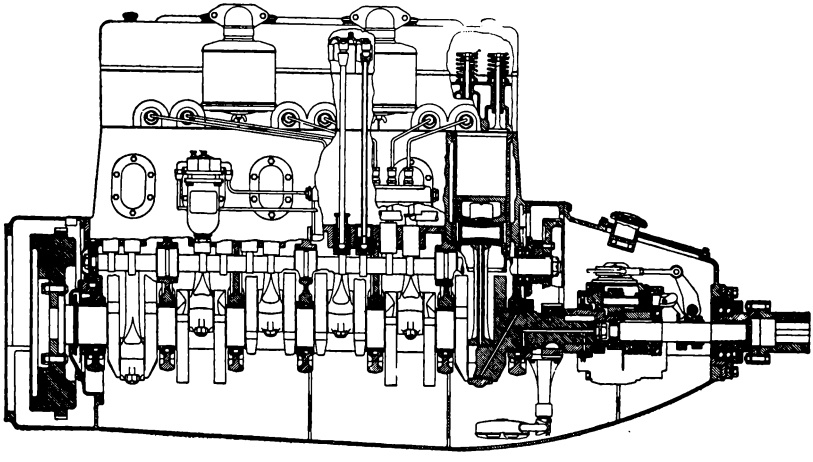

FIG. 275A.—Superior High-Speed Marine Diesel, Model A.

trolled by a wedge between the two sections of the push rod. The piston head is hollowed out to provide the combustion chamber. The oil manifold is provided with valves which make it possible to

cut off the oil from any injection nozzle, and thus permit the removal and repair of any faulty valve while the engine is operating.

The model "A" Superior Diesel engine is shown in Fig. 275A as

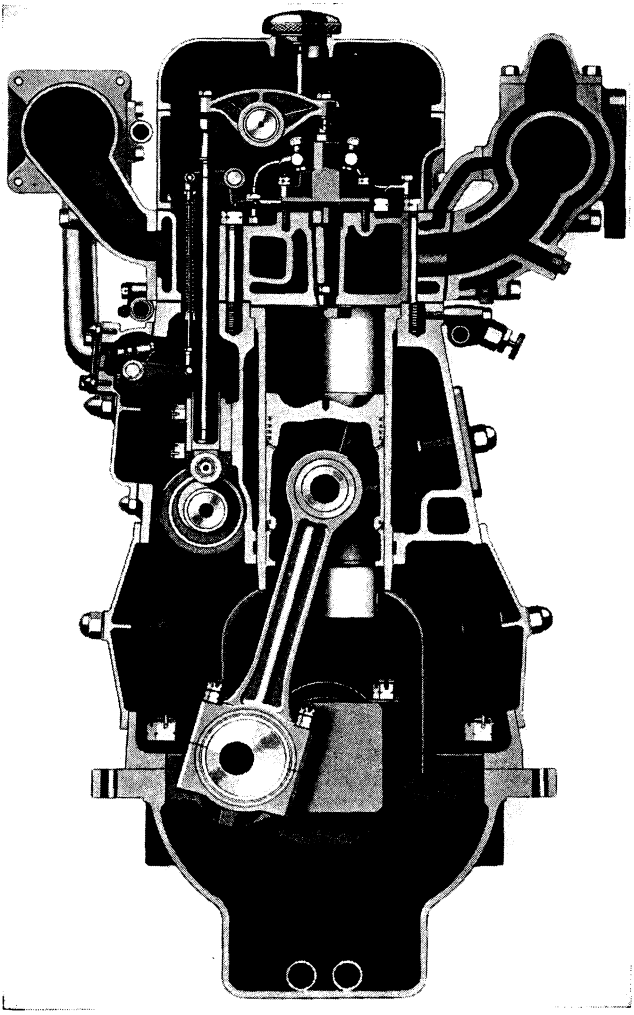

FIG. 276.—Winton Diesel Engine, Model 233A.

it is built for marine service. It is also built for industrial power units and stationary service. The engine is 4½-in. bore by 5¾-in. stroke and is built with 2, 4, 6 or 8 cylinders. These engines are

rated for marine service on the basis of 90 lb. per sq. in., b.m.e.p. Thus the 8-cylinder engine develops 150 b.hp. at 1800 r.p.m. For stationary service, the ratings are based on 75 lb. per sq. in., b.m.e.p. The compression pressure is about 380 lb. per sq. in.

A Bosch injection pump is used with pintle-type nozzles. The combustion chamber is the air-cell type and resembles slightly the Lanova air-cell. The nozzle is mounted horizontally and discharges into the main chamber, which is over one side of the piston. The air cell is opposite the nozzle, and may be shut off to aid in starting.

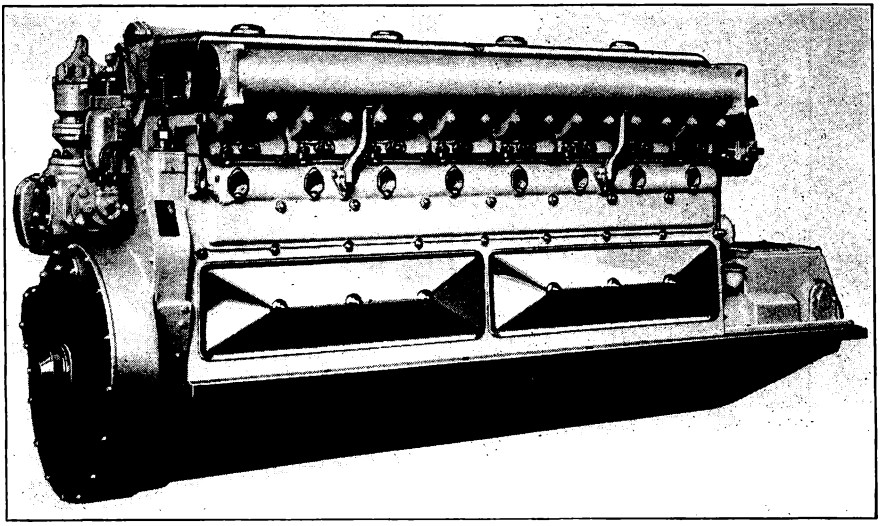

FIG. 277.—Winton Diesel, Model 233A-8.

The cylinder head is stepped to provide the main combustion chamber. The exhaust valve seats on the lower step while the inlet valve seats in the top of the combustion chamber. This combustion chamber approaches the shape of a flat cylinder. There are no removable parts of the chamber or air cell as they are both cast in the head.

A compression release is provided and is controlled by the throttle lever. These engines are equipped with counter balanced crankshafts which are now becoming popular with several manufacturers.

WINTON-GENERAL MOTORS. General Motors Corporation builds two-cycle engines which were formerly known as Winton

Diesel engines. They are manufactured in two-cylinder sizes, the smaller one having a capacity of 223 cubic inches per cylinder and the larger one 503 cubic inch capacity. The former include four, six and eight cylinders giving a power range of from 200 to 400 hp. The latter include eight, twelve and sixteen cylinder engines with a power output of from 600 to 1,200 hp.

The model 233-A Winton Diesel engine is shown in Figs. 276 and 277. The eight-cylinder size is rated at 200 b.hp. at 1200 r.p.m. This four-cycle engine injects the fuel into the center of an open combustion chamber with the new type Winton injector. The aluminum alloy pistons are cupped.

Most of the streamlined trains are equipped with Winton two-cycle Diesel engines. They have a combustion chamber similar to the one shown in Fig. 276. One of the largest engines used for this service is a sixteen-cylinder V-type unit which develops 1200 b.hp. A Roots-type rotary compressor delivers scavenging air through the V-passage to the cylinder ports. The exhaust gases pass out through valves in the cylinder heads.

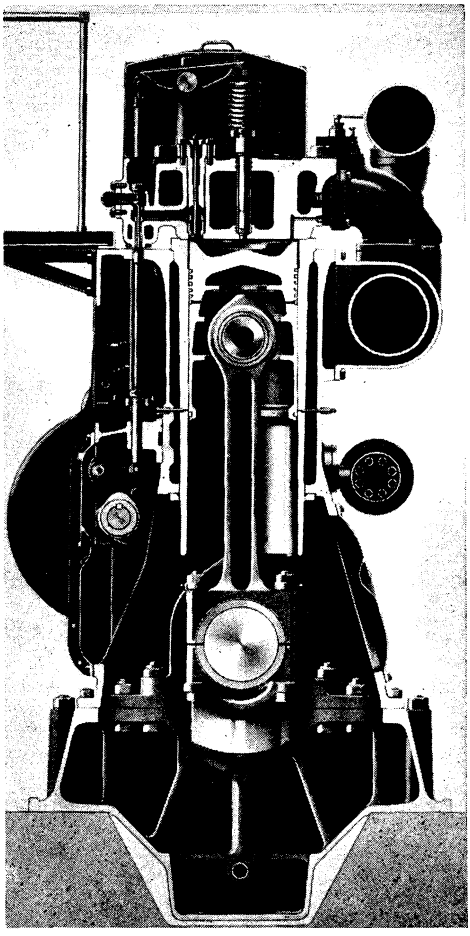

(Courtesy of Worthington Pump and Machinery Corporation.)

FIG. 278.—Details of Worthington Type EE Diesel Engine.

WORTHINGTON. The Worthington Pump and Machinery Cor-

poration build Diesel engines ranging in size from 8-in. bore by 10½-in. stroke to 18-in. bore by 25-in. stroke. They develop from 25 b.hp. at 514 r.p.m. to 135 b.hp. at 225 r.p.m. per cylinder. The latest types are completely enclosed.

One of the enclosed engines is shown in Fig. 278. This engine has a 16-in. bore by 20-in. stroke and develops 125 b.hp. per

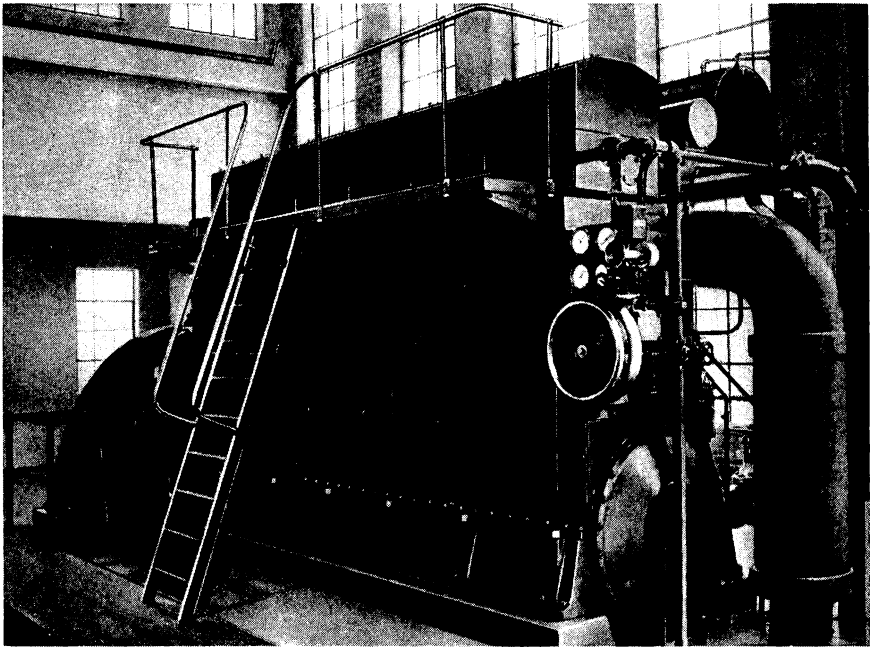

(*Courtesy of Worthington Pump and Machinery Corporation*)

FIG. 278A.—1-750 Hp. Type EE Diesel Engine Equipped with 625 KVA Electric Machine Mfg. Generator and 15 Kw. Belted Exacter.

cylinder at 327 r.p.m. It is built in from three- to twelve-cylinder units. Single-unit Bosch injection pumps are used in conjunction with multi-hole nozzles. A conventional open combustion chamber is used with a cupped piston head. The cylinder head fits on the top of the cylinder liner, which in turn seats on the top flange of the cylinder block. The head is bolted on by studs in the cylinder block. The bore of the sleeves is relieved above the travel of the top piston ring. This prevents the piston from coming in contact with the por-

tion of the sleeve which does not receive efficient cooling due to the top flange.

Instead of the liner being packed at the lower joint by a rubber ring placed in a groove in the cylinder block, the rubber ring is

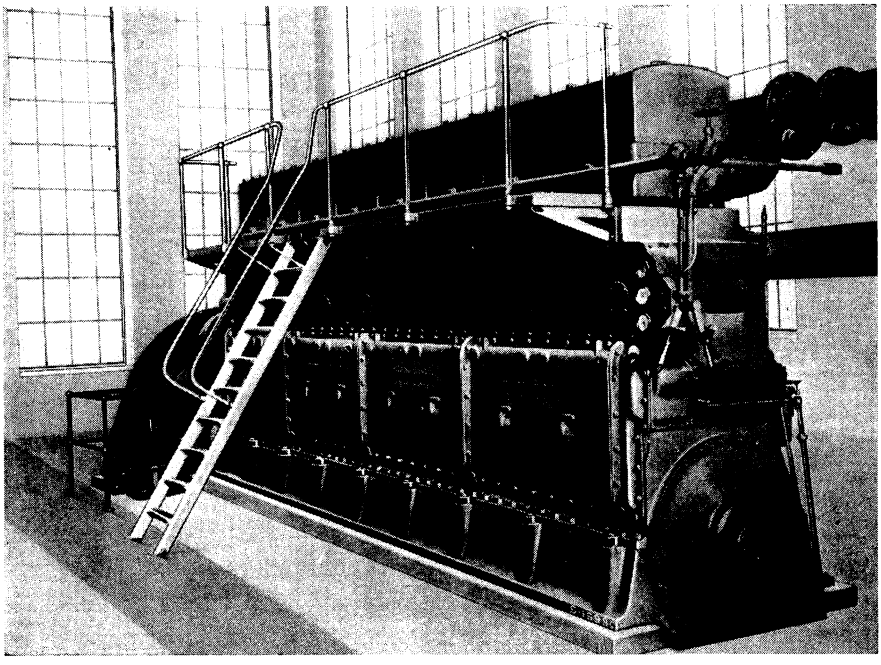

(Courtesy of Worthington Pump and Machinery Corporation)

FIG. 278B.—Type EE Diesel Engine.

clamped in place by a separate steel ring. The crankcase joint is fastened by internal bolts as well as the conventional row of bolts around the outside, so as to add to the rigidity. The cooling water circulates through an oil cooler as well as the cylinder jackets.

Chapter 13

SUPERCHARGERS

A supercharger or air compressor is eminently useful for three different applications:

(1) for 2-cycle engines, as a pre-compressor needed for scavenging such engines.
(2) for high-speed 4-cycle engines, where natural aspiration will not suffice to maintain full b.m.e.p. due to the limited time allowable for the induction of air.
(3) for aviation engines, to compensate for the drop in horsepower developed, due to the rarified air in the upper strata.

The superchargers are of either the centrifugal type—Buchi, G. E. and others, or of the displacement type—such as Roots and others. On the whole, the former depend upon speed to generate pressure, the impeller rotating at speeds up to 24,000 r.p.m. The latter, generating pressure by means of positive displacement of air, need not and could not be driven at such speeds.

A train of gears is the usual method of driving the impeller, but the Buchi system makes use of the pressure of the exhaust gases to furnish the power for driving the impeller. In this way, the turbine wheel actuated by the exhaust gases acts as a muffler and thus eliminates or at least reduces the roar of the exhaust.

A typical centrifugal supercharger is shown in Fig. 279. Of G. E. construction, it may be driven by gears or an exhaust turbine.

Insofar as 4-cycle engines are concerned, an increase up to 45 per cent in the horsepower developed by the engine is readily obtainable. For a well-designed supercharger the power required for driving the impeller or impellers should not exceed 10 per cent of the total developed by the engine.

In the case of a 2-cycle engine where compressed air is needed for the operation of the engine, the power required for driving the compressor may reach 15 per cent of the total power developed by the engine. In either case the gain obtainable with supercharging

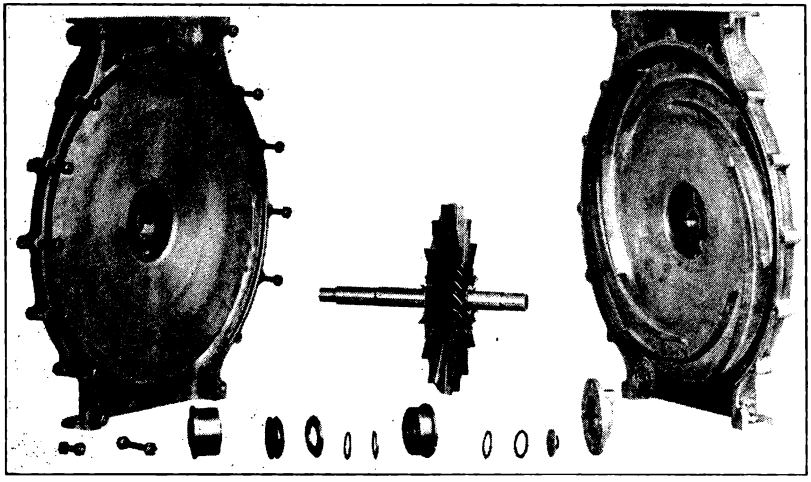

(*Courtesy General Electric Company*)

FIG. 279.—Centrifugal Compressor T-1-1100-13-22500.

justifies the additional complication as well as the power expended in driving the compressor.

Aircraft engines for high altitude flying demand supercharging. This holds good for Diesel engines as well as for gasoline engines. The fuel consumption of all engines rises rapidly with altitude, as illustrated in Fig. 280. Besides, an over rich mixture, in reality

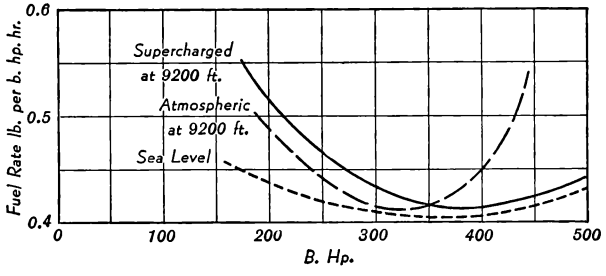

FIG. 280.—Fuel Consumption of 500 B.hp. Diesel Engine at from 40 to 100 Per Cent Load.

a shortage of oxygen, affects the temperature of the engine, Fig. 281.

Comparatively cool exhaust indicates a well-designed engine. It

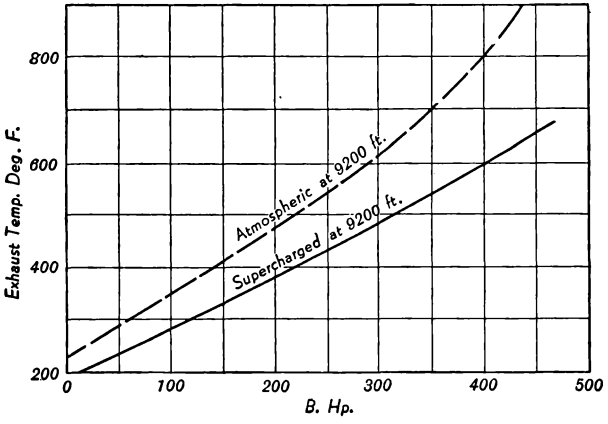

FIG. 281.—Temperature of Exhaust Gases.

also adds to the reliability, for high exhaust temperatures mean high engine temperatures, which should be avoided if at all possible.

The gear-driven G. E. supercharger, commonly known as a rotary inductor, is shown in Fig. 282. This type of supercharger is standard equipment for Pratt & Whitney and some other (gaso-

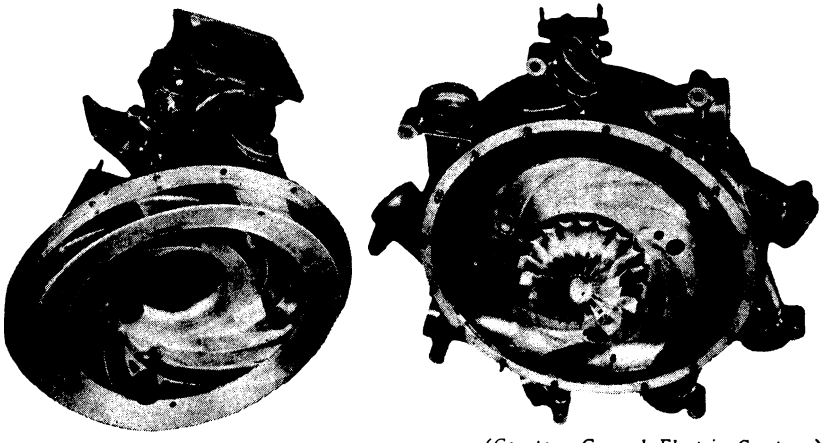

(Courtesy General Electric Company)

FIG. 282.—Supercharger of Pratt & Whitney's "Wasp" Airplane Engine.

line) aviation engines, but it could readily be adapted for Diesel engines.

Some interesting supercharging tests were made by Spanogle,* the results of which are shown in Fig. 284.

The engine used during these tests was of the single-cylinder type featuring an ante chamber, as shown in Fig. 285. Such an ante chamber, in the shape of a flattened pear with a comparatively large outlet towards the combustion chamber proper, does not create

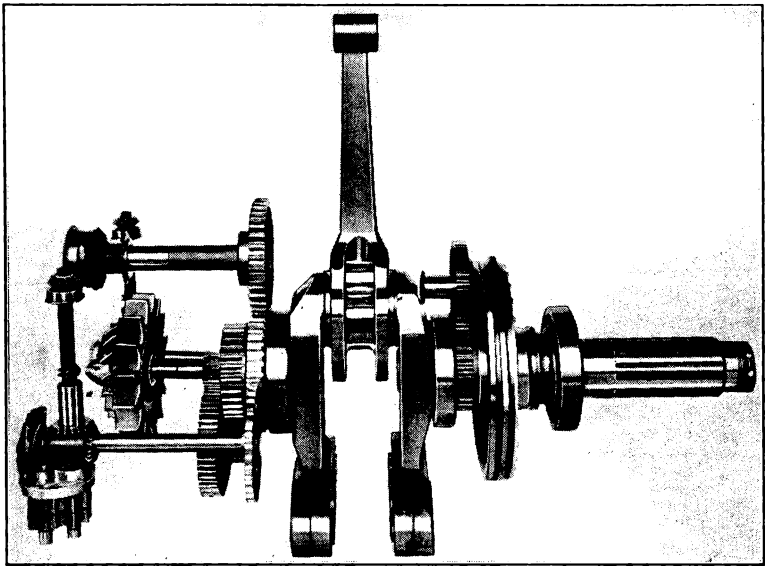

(Courtesy General Electric Company)

FIG. 283.—Supercharger Gear Train, Side View.

much turbulence. However, supercharging may compensate for this.

BUCHI Supercharger. The Buchi Syndicate has developed a practical exhaust-driven supercharger, which is now being used by a number of manufacturers.

Notable installations are those in connection with the B.M.W. passenger cars and the B.M.W. aircraft Diesel engine. It is also being used experimentally on some American locomotive and marine Diesels.

* J. A. Spanogle, The Quiescent Combustion Chamber, Trans. A.S.M.E., Dec., 1931.

The Buchi supercharger consists essentially of an exhaust-driven turbine and a centrifugal blower, both mounted on the same shaft. The housing containing the turbine, through which the hot exhaust gases must pass, is completely water cooled. The blower operates

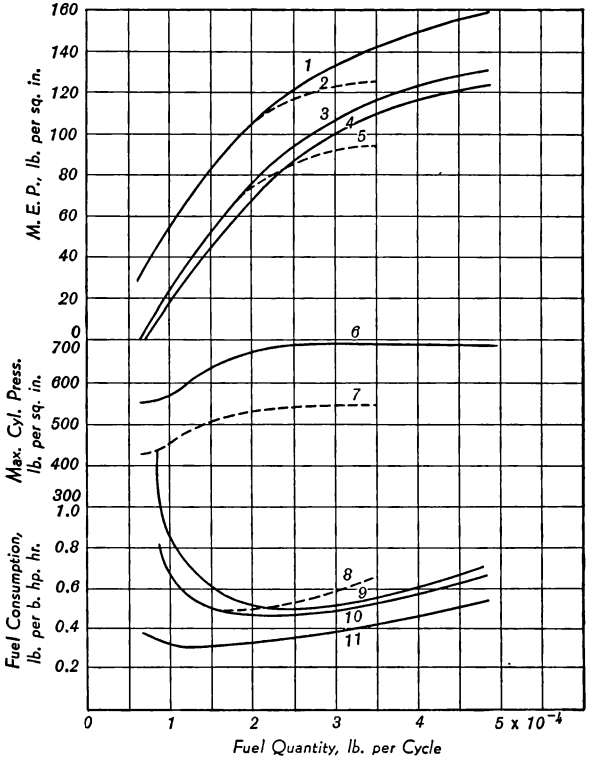

FIG. 284.—Results of Supercharging.

1—Indicated mean-effective-pressure, supercharged.
2—Indicated mean-effective-pressure, open aspiration.
3—Brake mean-effective pressure, supercharged.
4—Brake mean-effective-pressure, open aspiration.
5—Brake mean-effective-pressure, supercharged, net.
6—Maximum cylinder pressure, supercharged.
7—Maximum cylinder pressure, open aspiration.
8—Fuel consumption in lb. per b.hp. hr., open aspiration.
9—Fuel consumption in lb. per b.hp. hr., supercharged, net.
10—Fuel consumption in lb. per b.hp. hr., supercharged, brake.
11—Fuel consumption in lb. per b.hp. hr., supercharged, indicated.

within a separate housing which, while attached to the turbine housing, is insulated so that the air to be compressed does not absorb heat from the housing containing the hot exhaust gases. The entire arrangement is shown in Fig. 286.

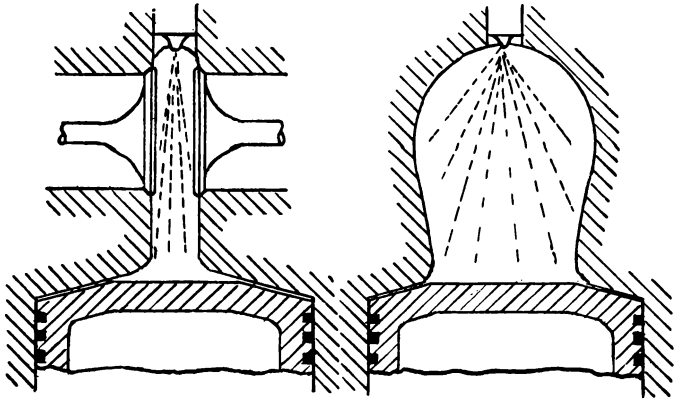

FIG. 285.—N.A.C.A. Diesel Test Engine.

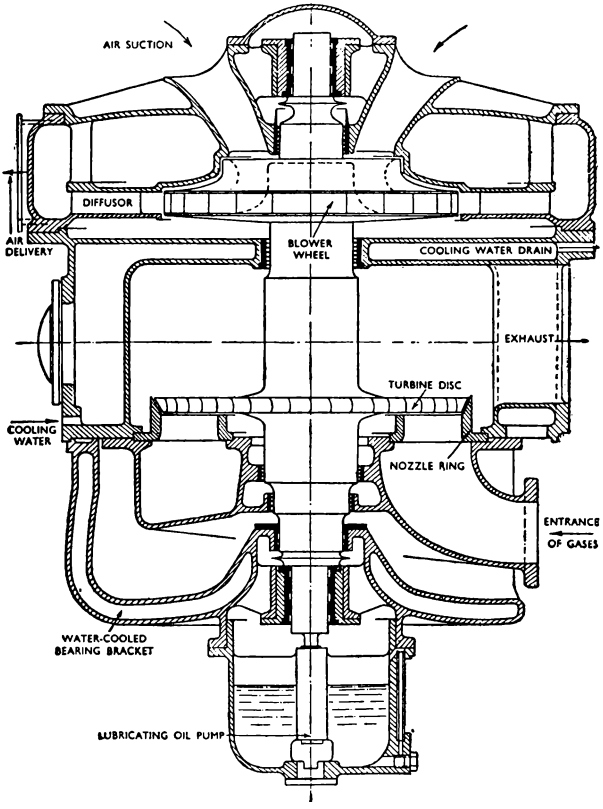

FIG. 286.—Buchi Supercharger.

The customary vertical installation of the Buchi supercharger, as applied to a 750-b.hp. 10-cylinder M.A.N. Diesel engine, is shown in Fig. 287.

These high-speed M.A.N. Diesel engines are intended for naval use, submarine chasers, etc.

BROWN-BOVERI Supercharger. Brown, Boveri & Company are manufacturing a supercharger of the Buchi system (Fig. 288).

The exhaust gases from the Diesel engine enter the nozzle ring and rotate the turbine disk which is attached to the shaft turning

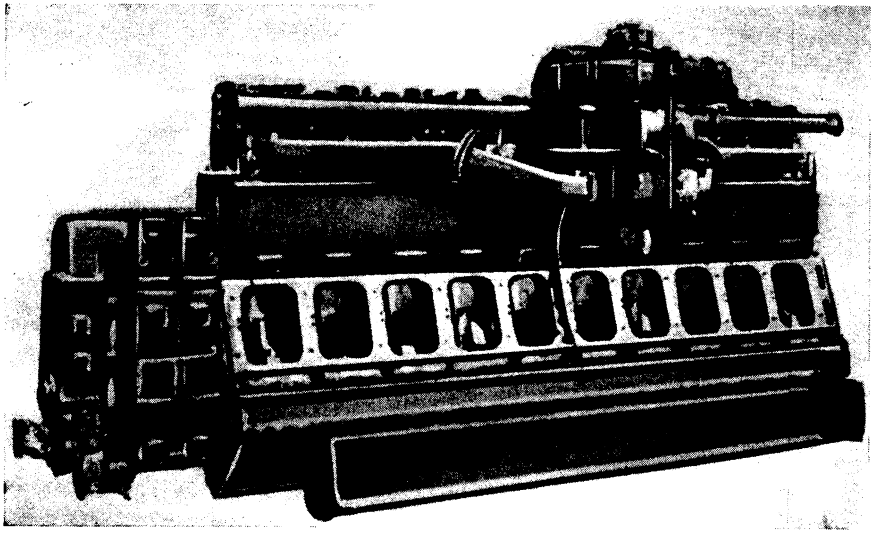

FIG. 287.—Ten-Cylinder 750 B.hp. M.A.N. Diesel Engine.

the supercharger impeller. The centrifugal compressor driven by the turbine disk delivers air to the engine under pressure.

Figure 289 gives the performance of the supercharger in actual operation. It will be observed that pressure of the exhaust gases is slightly under 3 lb. per sq. in. The temperature of the exhaust gases before entering the nozzle ring leading to the turbine disk is 870° F.; when discharging into the atmosphere the temperature of the exhaust gases has dropped to 775° F. The minimum fuel consumption of the Diesel engines is 0.355 lb. per b.hp. hr.

The exhaust-driven supercharger is mounted vertically and

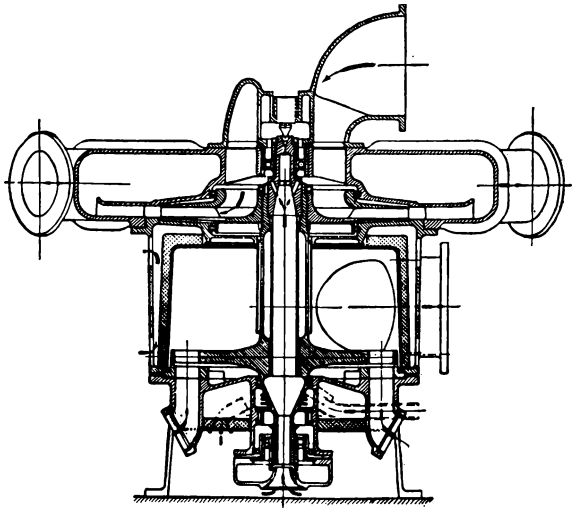

FIG. 288.—Brown-Boveri Supercharger.

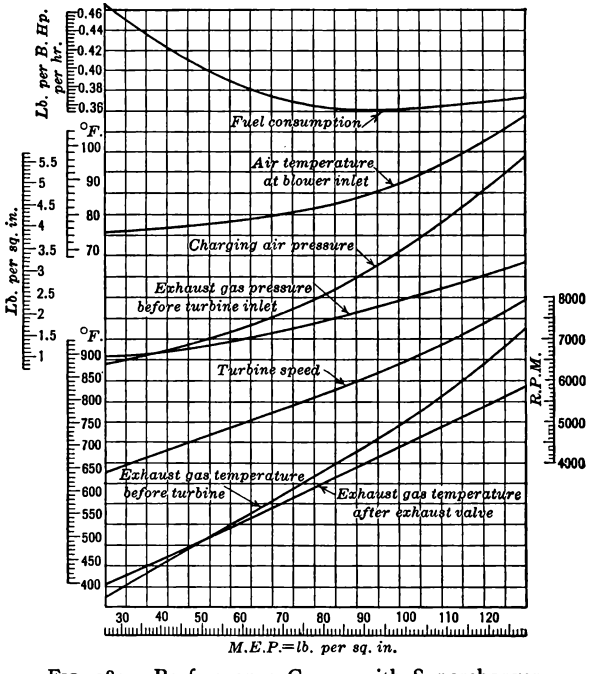

FIG. 289.—Performance Curve with Supercharger.

should be of special use in connection with airplane engines. It furnishes compressed air without mechanical connections to the engine crankshaft, and thus does not add to the engine's vibration.

The power requirements for driving the Buchi supercharger are considerably less than for gear-driven compressors, and the utilization of the exhaust-gas pressure as a driving medium eliminates the need of a muffler.

ROOTS-CONNERSVILLE Type Supercharger. The Roots-Connersville supercharger is of the positive rotary type. Positive move-

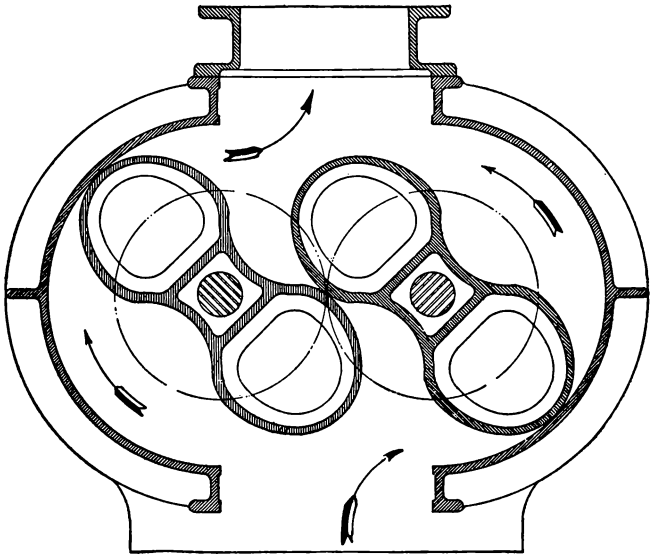

FIG. 290.—Roots Supercharger.

ment of the air is assured by the rotation of the impellers within the cylinder, Fig. 290.

The operating principle is easily understood. Two impellers, mounted on parallel shafts, rotate in opposite directions. Contour and finish of these impellers is such that a clearance of a few thousandths of an inch is precisely maintained by a pair of accurately cut timing gears. Due to the absence of internal friction, no internal lubrication is required. Air is drawn in through the inlet, trapped between the impellers and the casing, forced positively into the out-

let, and delivered as free from oil, impurities, and moisture as when it enters.

Simplicity is an outstanding feature. There are no restricted or inaccessible passages through which the air must be forced; no

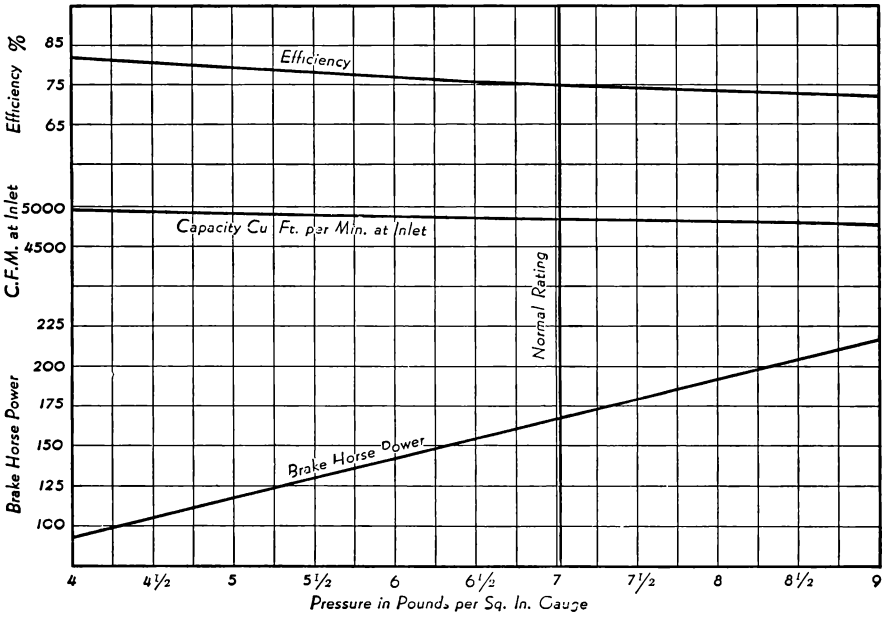

FIG. 291.—Roots Supercharger Performance Curves.

valves, springs, or other small parts to fail, or require adjustment or replacement.

Performance curves of the Roots Supercharger are shown in Fig. 291.

CHAPTER 14

DIESEL ENGINE DESIGN FEATURES

CYLINDER BLOCKS AND SLEEVES

Extremely high compression ratios, 16 to 1 and over, require an unusually heavy cylinder block and crankcase construction, necessitated by the extreme load the crankshaft bearings must carry. The usual method, supporting the main bearing upon webs cast into the upper or lower crankcase, is not sufficient unless the entire construction is made excessively heavy.

Some of the designers of automotive Diesel engines have adapted a construction in vogue for stationary and marine engines; i.e., supporting the main bearing by through rods extending to the cylinder head, Fig. 292.

This bolt has an eccentric section at the top of the crankcase to prevent rotation when either nut is loosened. These bolts hold the main bearing caps and also assist in clamping the head on the cylinder block. Another construction used in some large stationary and marine engines is shown in Fig. 293.

Many Diesel engines are made of heavy integral castings without through-bolts, as shown in Fig. 294. Here the cylinder block and upper "A" frame crankcase are one casting with a trough along one side to carry the camshaft.

The type of construction best suited for high compression ratios is that of the opposed piston, where the load stresses are not held by the cylinder block but fall directly upon the crankshaft and connecting rods. The A.E.G., Hill, Junkers and Sterling types come within this class.

The dry-sleeve construction is sometimes employed in gasoline engine practice, principally for engines of the truck or bus type, Fig. 295. The object is to provide an easy means of restoring the compression in worn cylinders by the insertion of a sleeve rather

than by reboring. The dry sleeve permits better cooling of the top of the sleeve than most of the wet-sleeve constructions. Even dry sleeves may overheat at the top, and this causes distortions. In order to prevent this distortion, Waukesha Motor Company uses a so-called fire ring, Fig. 296, above the cylinder sleeve. Thus, the

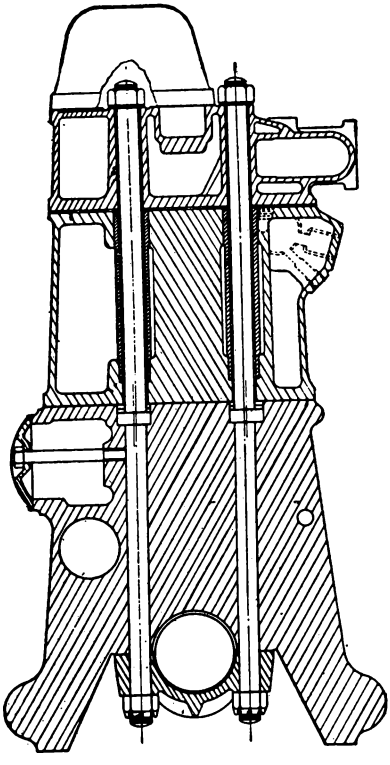

FIG. 292.—Hercules Through-Bolt Construction.

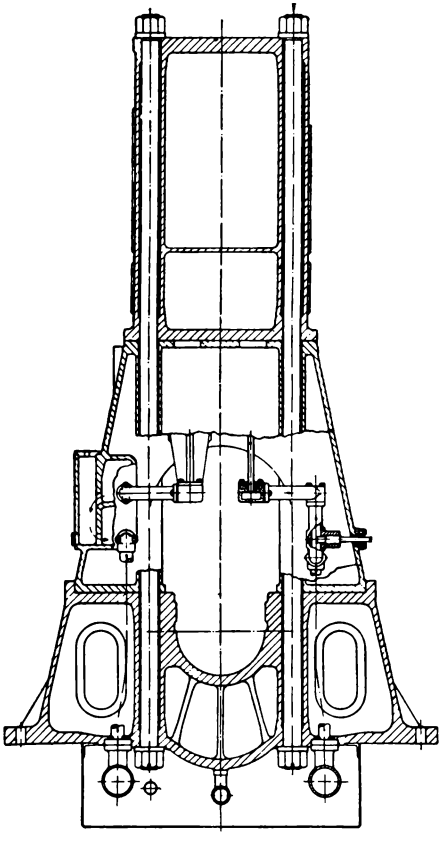

FIG. 293.—Busch-Sulzer Through-Bolt Construction.

portion of the cylinder wall which becomes hottest, and has the least efficient cooling cannot cause distortion in that portion of the wall in contact with the piston rings. The top of the piston extends into this ring but does not touch it, since the ring has a larger bore than the sleeve.

The wet-sleeve construction permits the cooling water to come in direct contact with sleeve; hence the maximum of cooling can thus be accomplished, whereas in the dry-sleeve type, the cooling action of the water is hampered by the cylinder walls interposed between the cooling medium and the cylinder sleeve proper. However, the upper portion of the wet sleeve is difficult to cool, except by expensive construction, due to the thick sections of the jacket and liner flanges. This is not a serious problem in the medium and slow-speed engines, but in the high-speed American engines the wet-sleeve

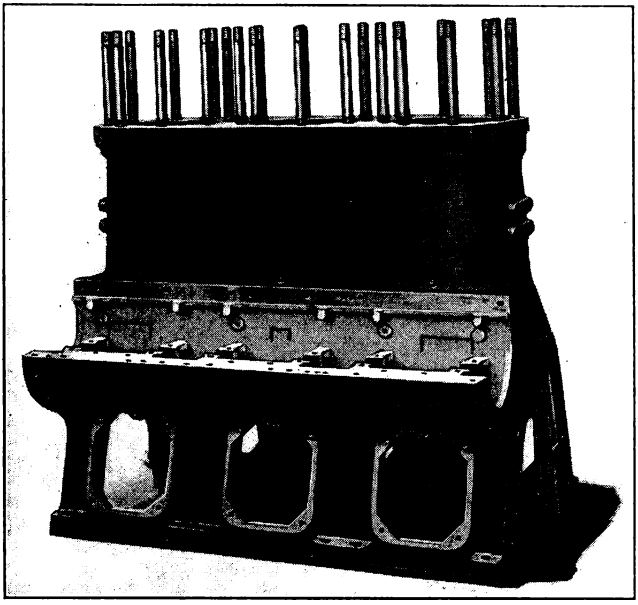

FIG. 294.—Chicago Pneumatic Cylinder Block and Crankcase.

construction is being replaced in several instances with either dry sleeves or integrally-cast cylinder walls. In such cases the cylinders or the dry sleeves are either molychrome or some other chromium alloy castings. The uniform cooling of the upper portion of the cylinders is of more importance than the advantages of the wet sleeves in the high-speed Diesel engines.

The wet-sleeve cylinder construction demands water-tight joints. This problem is being solved in different ways. Fig. 297 shows the expensive male-female construction of securing a water-tight joint

between the sleeve and the cylinder head by means of a copper-asbestos washer.

A rubber ring is the usual method of securing a water-tight joint between the lower portion of the water jacket and the crankcase. A plain rubber washer as in *A*, allowing the cylinder sleeve to expand and contract unhampered, seems a better construction than a compression ring against the rubber washer, as in *B*, Fig. 298.

Another type of wet-sleeve construction is shown in Fig. 299. In this type of construction, a ring flange is made use of rather than

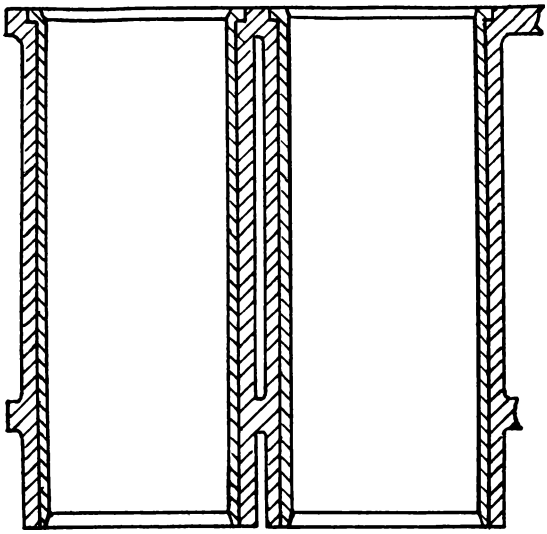

FIG. 295.—Dry-Sleeve Cylinder Construction.

the costly male-female joint for the securing of the upper part of the sleeve. The lower end of the sleeve has a floating fit in the cylinder block, a water-tight joint being provided for by means of circular rubber washers.

Another type of construction being used successfully by the Cooper-Bessemer Corporation on marine and locomotive engines is shown in Fig. 300. Here the copper gasket at *A* is used to seal the pressure in the cylinder, while the gasket at *B* seals the water jacket. It is interesting to note that the gasket *A* is sealed by the small studs while the water jacket is sealed by the large through-studs that lead

to the main-bearing caps. The cylinder head and liner are thus held in position independent of the cylinder-block casting.

A wet sleeve of ample proportions for 2-cycle engines is shown in Fig. 301. The intake and exhaust ports are large and of a con-

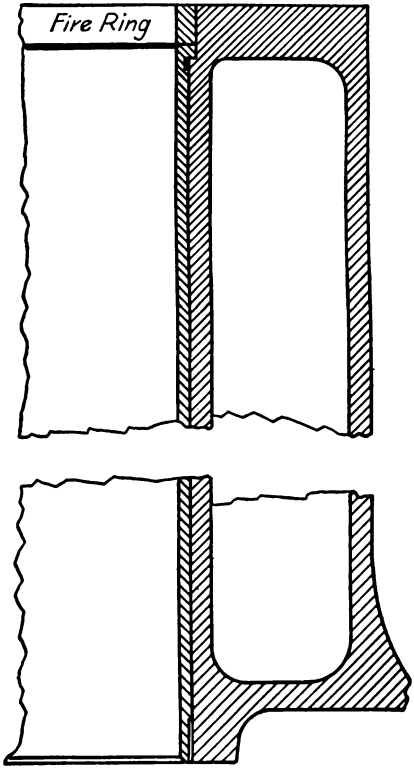

FIG. 296.—Waukesha Fire Ring.

tour permitting tangential flow, and therefore turbulence, for the incoming air charge.

This sleeve is well proportioned, of sufficient strength to withstand the operating pressures. The sleeve is of comparatively thin cross section, except in its upper part, which is subjected to the initial high-combustion pressure.

A steel cylinder for an air-cooled Diesel engine is shown in Fig. 302.

The steel cylinder has integral cooling fins, machined from drop-

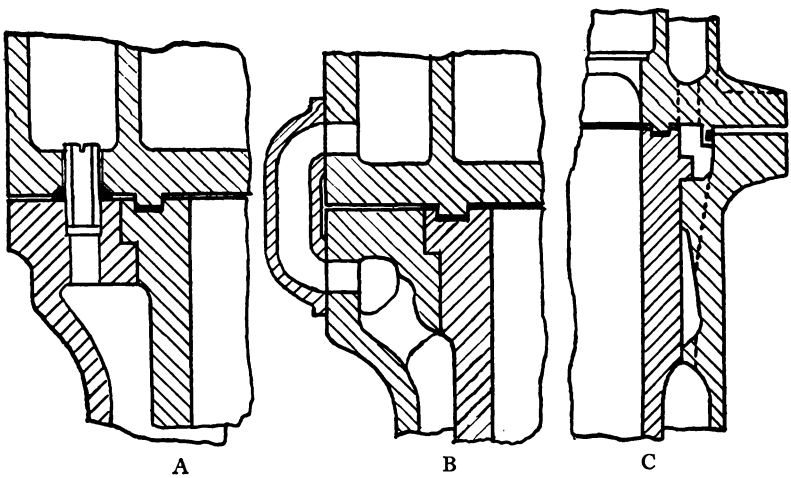

FIG. 297.—Water-Tight Sleeve Joints.

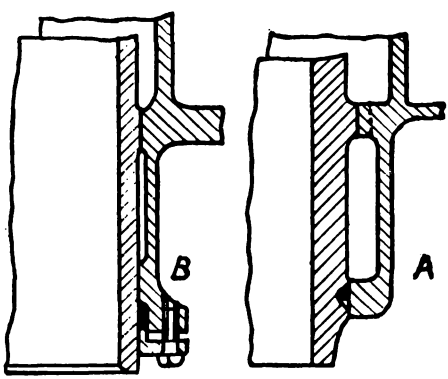

FIG. 298.—Securing Lower End of Sleeve.

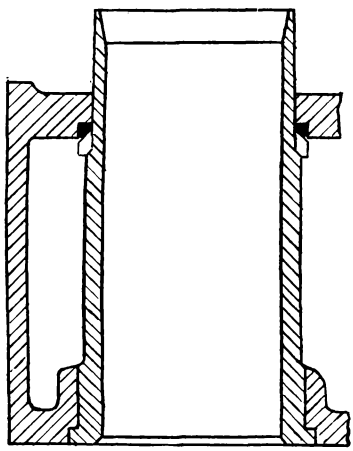

FIG. 299.—Wet-Sleeve Construction.

forged steel. A cast or forged aluminum head is screwed and shrunk on, thus completing the cylinder.

Such a construction, while expensive, is customary practice for air-cooled aviation Diesel engines.

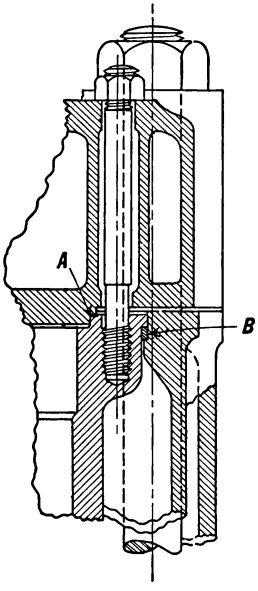

FIG. 300.—Wet Sleeve with Auxiliary Head Studs.

PISTONS

The pistons of automotive Diesel engines follow closely the practices in vogue with gasoline engines. The material generally used is cast iron or an aluminum alloy, although cast steel is used, and in some cases even drop-forged steel heads (Mercédès-Benz) with cast iron or aluminum skirts.

On the whole, an aluminum piston is best suited for high-speed application; its light weight and its excellent heat conductivity make high-speed Diesel engines possible.

Many pistons are made of cast iron, heavy in design and of proportions that do not permit high engine speeds. The l/d ratio for stationary or heavy marine Diesel engines is usually 1.7 to 1 or even 2 to 1. Such long skirts in proportion to piston diameter are not the best dimensions for high-speed service, where lightness is essential.

Pistons should be heavy enough to withstand the load and yet be free from excessive webbing. Four, six or eight webs on the under side of the piston head extending far down the skirt have a tendency to deform the skirt under load and at high temperatures, forcing the piston to assume the shape of a polygon rather than that of a true cylinder, and once the piston has assumed the shape of a quadrigon, hexagon or octagon—depending on the number of webs—even to a minute extent, excessive piston friction will set in and the piston may seize in spite of sufficient oil supply.

In Figs. 303 and 304 are illustrated cast-iron Diesel engine pistons suitable for medium speeds, although a piston of the proportion shown in Fig. 304 is giving satisfactory service in a certain

Diesel truck engine of 6 cylinders, 90 b.hp. (4½-in. bore) at a speed of 1500 r.p.m.

Typical aluminum pistons for Diesel engines are shown in Figs. 305 to 314.

The piston shown in Fig. 305 possesses a l/d ratio of 1½ to 1, has 6 piston rings, and oil-drainage holes and grooves.

A typical Diesel engine piston of the semi-heavy duty type is shown in Fig. 306. This piston is of an aluminum alloy, but of a rather heavy construction. Five rings are fitted, and the piston head features two indentations directly beneath the overhead valves. This construction permits the very minimum of compression space and yet allows for efficient valve timing; i.e., the exhaust valve may open before T.D.C. and the intake valve may be held open past T.D.C.

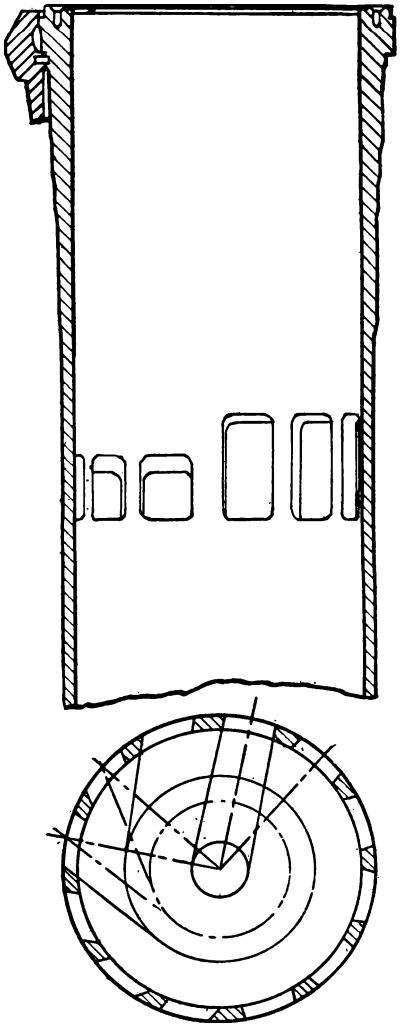

FIG. 301.—Wet Sleeve for 2-Cycle Engine.

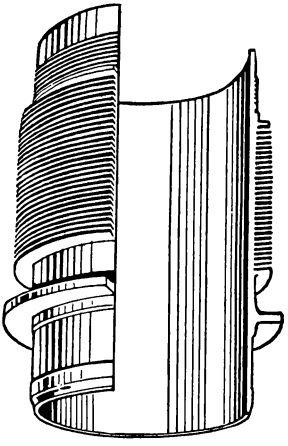

FIG. 302.—Steel Cylinder for Diesel Airplane Engine.

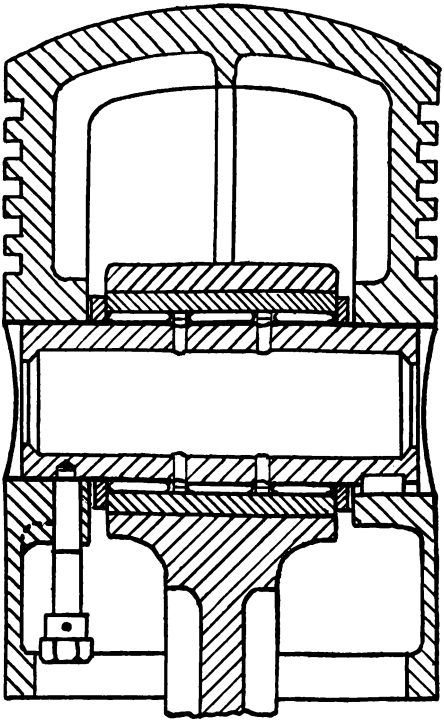

FIG. 303.—Heavy-Duty Piston.

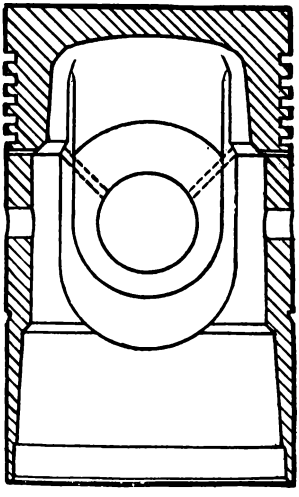

FIG. 304.—Long-Skirt Diesel Truck Engine Piston.

It is a construction in vogue for medium-speed engines (not over 2000 r.p.m.) and is not suitable for high-speed Diesel engines.

Aluminum pistons with split and separated skirts sometimes used in high-speed Diesel engines are those of Figs. 307 and 308. The *l/d* ratio is 1¼ to 1, but four rings are fitted, two single rings for the upper grooves and twin rings for the lower groove.

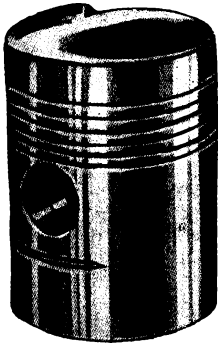

FIG. 305.—Long-Skirt Aluminum Piston.

This piston features a hollow bridge for the wrist pin bosses and the very minimum of webbing underneath the piston head. This piston is of novel construction, embodying both a circular oil groove as well as oil drainage holes in the groove occupied by twin oil-wiper rings. The wrist-pin bosses are secured by triangular webs, the upper extending to the piston head, the two

lower connecting to the skirt. The almost square opening within the piston skirt at both wrist pin bosses aids in the cooling of the piston because this construction permits air circulation and adequate spraying of oil.

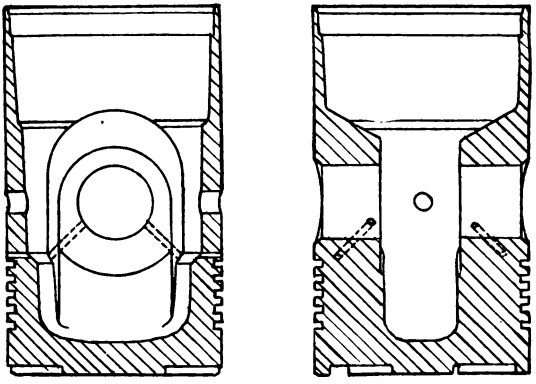

FIG. 306.—Typical Aluminum Piston.

The Vesta type of aluminum piston is shown in Fig. 309. The piston head is flat and supports the wrist pin bearings by means of

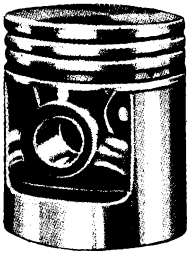

FIG. 307. — Four-Ring Aluminum Piston.

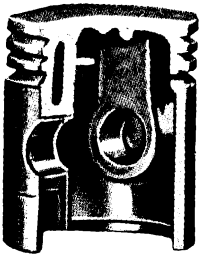

FIG. 308. — Four-Ring Aluminum Piston with Oil Groove.

two strong webs. The split skirt is of very generous proportions and is cast onto the wrist-pin bearings rather than to the piston head.

This type of construction allows for free expansion of the skirt, and the heavy supports with their semi-circular braces conduct the

excess heat from the piston head directly to the skirt for quick dissipation.

Only four piston rings are fitted, the three upper rings acting as compression rings, the lower as an oil-wiper ring.

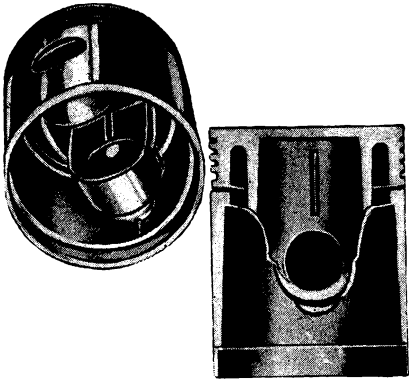

FIG. 309.—Vesta Aluminum Piston.

Pistons with split skirts or skirts separated from the head are suitable only for light or medium duty high-speed Diesel engines. For truck, tractor, marine or stationary high-speed engines, a solid aluminum piston with longer skirt and with the top ring farther from the piston head is preferred by American designers.

For heavy-duty Diesel engines running at either medium or high speeds added precautions are often taken to protect the top piston ring as is shown in Fig. 310. At *A* is shown a circumferential groove about half the width of the piston-ring grooves. This groove re-

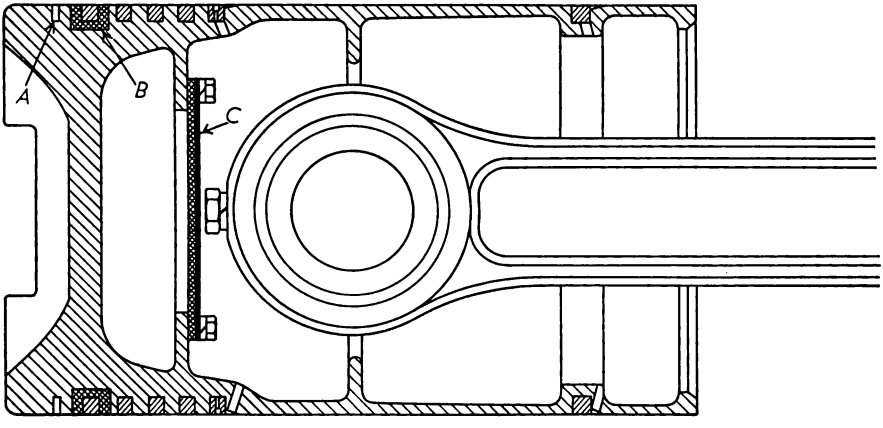

FIG. 310.—Heavy-Duty Aluminum Piston.

tards the flow of heat to the top ring and compels it to pass down through the inner body of the piston.

Under extreme service and temperatures there is a tendency for

the top piston rings to hammer the ring grooves and cause excessive side clearance. To prevent this, a bronze ring *B* is cast in the alumi-

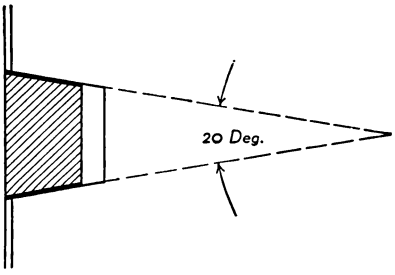

FIG. 311.—Waukesha Compression Ring.

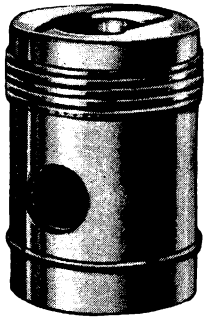

FIG. 312. — Combustion Chamber Piston.

num piston to carry the top ring. Sometimes this ring is made wide enough to carry the two top piston rings.

The plate shown at *C* prevents the oil coming in contact with the piston head, thus protecting the lubricating oil and providing a higher temperature piston head as an aid to combustion. While this plate is sometimes used in aluminum pistons, it is more commonly found in cast-iron pistons.

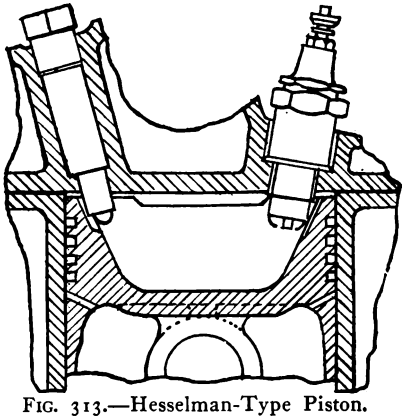

FIG. 313.—Hesselman-Type Piston.

Ring sticking is a common trouble in Diesel engine cylinders, and it is the forerunner of serious trouble and loss of efficiency in an engine. Waukesha Motor Company is using special rings to prevent sticking which are shown in Fig. 311. The compression rings, or top rings on the piston, have a trapezoidal section, their top and bottom surfaces having an included angle of 20 degrees. The piston-ring grooves are turned to the corresponding form. The ring is a fairly close fit in the groove when completely submerged. As the piston moves from one side of the cylinder to the other upon reversal of its stroke, the clearance

between the ring and groove is changed; this appears to have a pumping and scouring action, preventing the oil from remaining long in the groove. It is claimed that much higher operating temperatures are possible with this construction without evidence of ring sticking.

Piston Combustion Chambers. In a great many cases, the designers of Diesel engines utilize piston heads to provide for a combustion chamber. Typical examples of these are Figs. 312 and 314.

A combustion-chamber piston which takes up all of the compression space (except for a clearance of $\frac{3}{64}$ inch between piston and cylinder head) is shown in Fig. 312.

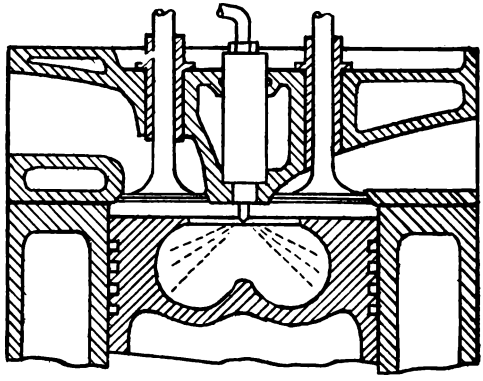

FIG. 314.—Saurer Combustion Chamber.

Since but the very minimum of clearance is allowed, the piston head also contains indentations for valve clearance.

On the whole such designs are ill-chosen; the piston is subjected to extreme heat which cannot readily be dissipated by the rings or by the oil-spray from within the crankcase against the under side of the piston.

A combustion chamber piston used on the Hesselman spark-ignition engine is shown in Fig. 313, while in Fig. 314 is seen the Saurer-type double turbulence piston.

Medium and Low Speed Engine Pistons. The Krupp mushroom piston, Fig. 315, has an uncooled central portion (mushroom),

which is attached to the piston in such a way as to provide a resistance to heat dissipation. The piston proper may discharge heat by means of the rings to the cylinder walls, but the mushroom head, being insulated by an air-space from the piston proper, will remain at a suitable high temperature to assure catalytic ignition.

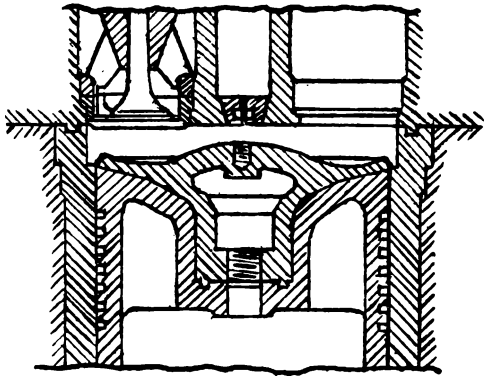

FIG. 315.—Krupp Mushroom Piston.

Such a piston construction is heavy, and hence used on medium and low-speed engines; and the heat retained by the mushroom varies with the load and speed of the engine.

A flat plate of nickel-chromium steel is used on top of the I.H.C. aluminum piston in their industrial and tractor Diesel engines.

In Fig. 316 is shown a Cooper-Bessemer aluminum piston. The head has the rather common half-doughnut chamber. Many pistons having this shape head have an additional groove above the top piston ring, *A*, Fig. 310. The piston pin boss in Fig. 316 is very

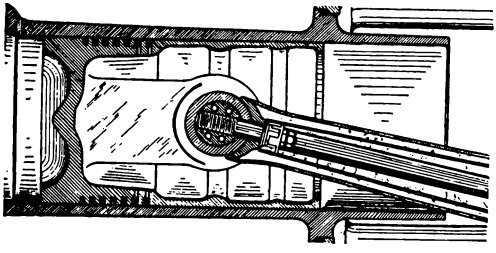

FIG. 316.—Cooper-Bessemer Piston.

novel, since the upper bearing surface for the pin extends nearly the whole width of the piston, with only a small gap between the two bosses. This is made possible by the fact that the connecting rod does not surround the pin, but is fastened to the lower side of it by two studs.

Another assembly where the connecting rod is bolted to the pis-

ton pin is shown in Fig. 317. This piston is for large slow-speed engines. It consists of a forged-steel head, a plug, a skirt and a pin-bearing assembly. As will be seen, the top of the pin has a full-length bearing, and the skirt casting has no bosses and is not pierced for the pin. The piston skirt is abnormally long and requires a 5¼ to 1 ratio of connecting rod and crank. The piston head is water-cooled.

In their locomotive Diesel engines, Busch-Sulzer use similar pis-

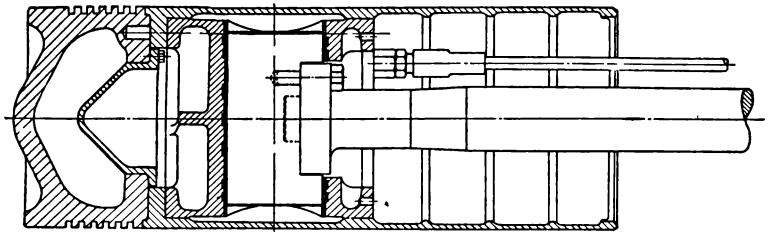

(Courtesy of Busch-Sulzer Bros. Diesel Engine Company)

FIG. 317.—Busch-Sulzer Trunk Piston.

tons made of aluminum alloy in two parts—the head and skirt, and the pin bearing similar to the one shown.

Another type of cast-iron piston used on low-speed horizontal air injection Diesel engines is shown in Fig. 318. This piston has

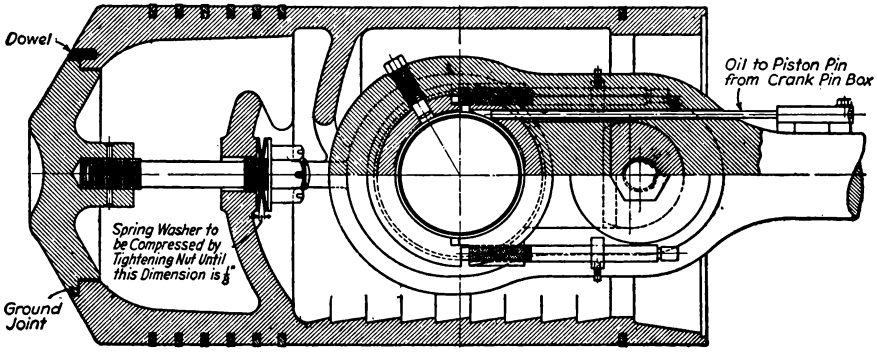

FIG. 318.—Allis-Chalmers Piston.

a false head used primarily to prevent undue heat stresses in the large diameter piston. Guards are provided to keep most of the lubricating oil away from the head.

In Fig. 319 is shown the cast-iron piston, pin and connecting rod used on the Nelseco low and medium-speed marine and stationary Diesel engines. The piston is fitted with five compression and one

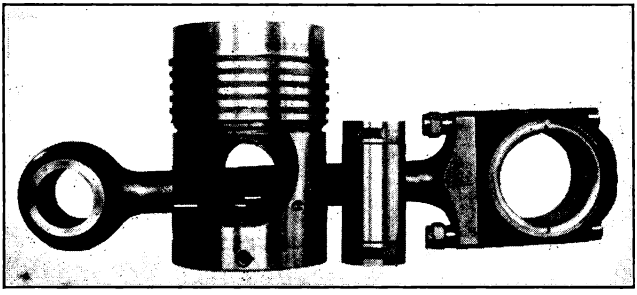

FIG. 319.—Nelseco Piston and Connecting Rod.

oil ring. The pin is locked in the piston by wedge pins in each side of the piston. The connecting rod is hollow-drilled and circular in section with a separate crank-pin box.

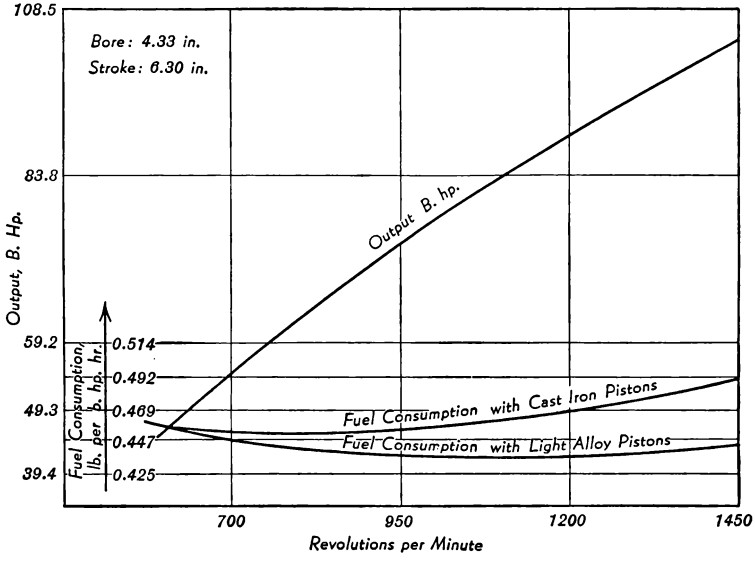

FIG. 320.—Comparative Fuel Consumption Curves.

The difference in fuel consumption with cast-iron pistons as compared to aluminum pistons is shown in Fig. 320.* Aluminum pis-

* Test of Henschel Diesel Engine.

tons dissipate heat more adequately and quickly than cast-iron pistons, and hence run cooler, to the benefit of the wrist pins. The piston temperature existing in a well-designed Diesel engine using aluminum pistons is shown in Fig. 321.*

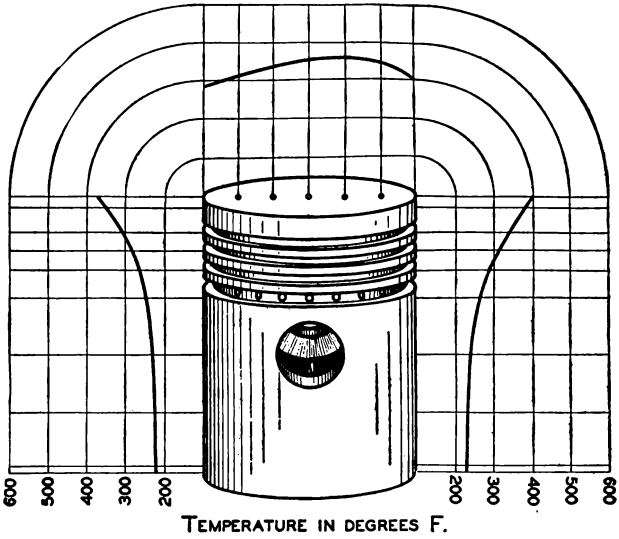

FIG. 321.—Temperature of Aluminum Piston.

CONNECTING RODS

The connecting rods used in Diesel engines are very similar to those in use in gasoline engines, except that Diesel engines, due to the higher compression pressures, require stronger rod constructions.

The rods are made of drop-forged steel, of the customary I section or of circular section. A typical connecting rod is shown in Fig. 322. In heavy-duty engines the wrist pin and its bearings are lubricated under pressure rather than by splash. Fig. 322 shows an arrangement by which oil is fed to the wrist pin by means of a tube pinned to the connecting-rod web.

This type of construction is of low cost, but is not as satisfactory as a rifle-drilled rod—i.e., a rod whose web is drilled through from end to end so as to obtain an oil passage. A very high-grade con-

* Tests of Electron Metal Corp.

struction is shown in Fig. 323. This rod is made of drop-forged aluminum alloy. The I section web has a circular enlargement in the center of the web, thus permitting rifle-drilling. The oil passage

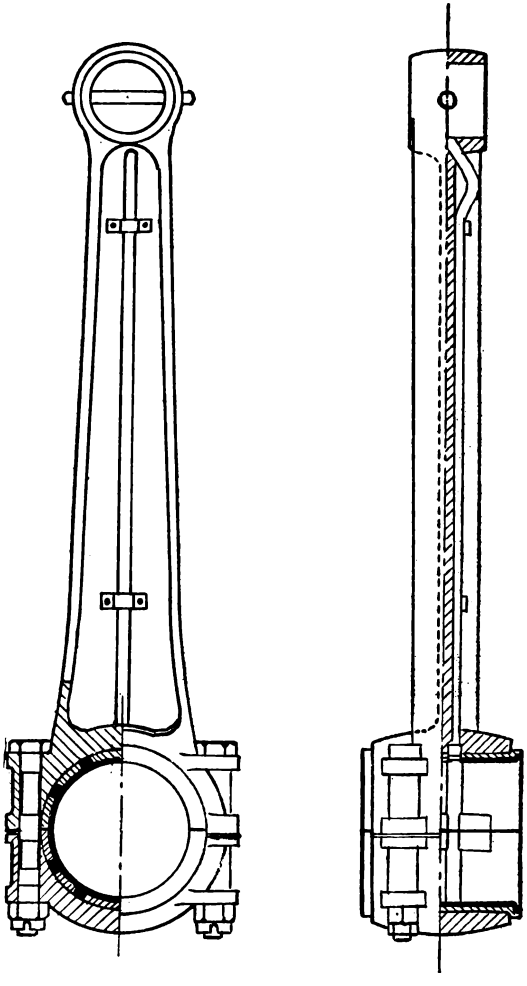

FIG. 322.—I-Section Rod with Oil Pipe.

thus secured makes leaking of the oil impossible; leakage is not always preventable with shrunk-in and pinned-on oil tubes, as shown in Fig. 322.

A very novel connecting rod is that of the (British) Dennis

engines, shown in Fig. 324. The Dennis connecting rod has an enlarged I section web, rifle-drilled so that oil under pressure may reach the wrist pin and its bearings. The large journal-end of the connecting rod is not split horizontally as is customary, but at an angle. This reduces the width of the rod and permits extrication through the cylinder when overhauling the engine, which would not be possible were the rod of the usual width. Disconnecting the rod and piston from the underside of the engine requires the removal of the crankshaft in many cases; this the Dennis rod construction obviates.

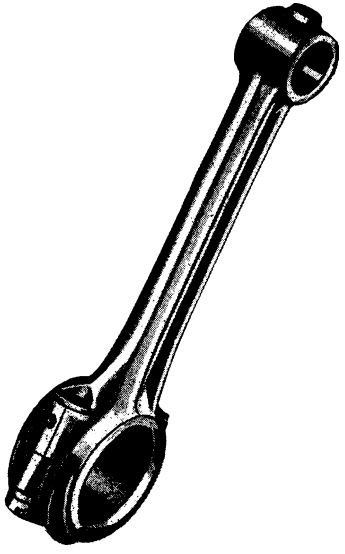

FIG. 323.—Aluminum Alloy Connecting Rod.

In Fig. 325 there is shown a comparison of the connecting rods used by Hercules Motor Corporation in their gasoline and Diesel engines of approximately the same bore and stroke. While the I-beam sections are about the same size, the bearing diameter for the Diesel engine is 2½ in., while for the gasoline engine it is 2 in.

The Diesel connecting rod is somewhat similar to the Dennis rod in Fig. 324 at the lower end, except that a tongue-and-groove joint is used. The rod is rifle-drilled for pin lubrication. The pin is allowed to float in the piston and rod, being retained by spring wires in each side of the piston. A necked connecting rod capscrew is shown. This prevents the localization of stresses at the root of the threads. The piston shown is typical of American high-speed Diesel engine practice. It has four compression rings and two oil rings.

FIG. 324.—Dennis Connecting Rod.

FIG. 325.—Gasoline and Diesel Engine Connecting Rods.

CRANKSHAFTS

The crankshafts of Diesel engines are very similar for engines of comparable cubical content, except that they are of larger proportions and the values given here are based upon the satisfactory performance crankshafts have given in actual service; no attempt is

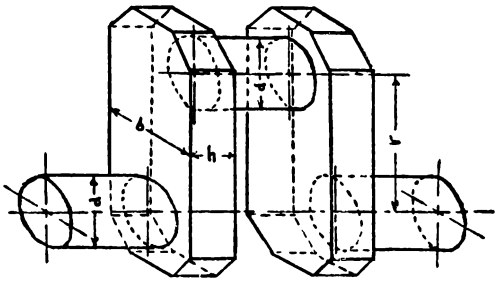

FIG. 326.—Crank-Design, Medium Speed Diesel.

made to analyze or calculate the torsional and vibratory stresses crankshafts must withstand in actual service. We are here concerned not with the underlying theory, but with those designs which have been found satisfactory in actual operation.

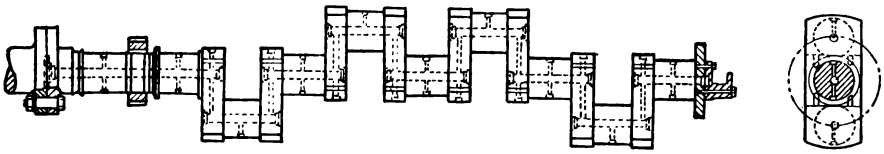

FIG. 327.—4-Cylinder, 6-Bearing Crankshaft, Low-Speed Type.

Counter-balanced crankshafts, so widely used in automotive gasoline-engine practice, are finding favor to some extent in the Diesel engine field. Counter-balancing the crankshaft contributes nothing to the general balance of the engine and in addition very seriously lowers the critical speeds of torsional vibration. The truly

high-speed Diesel engines of the future may require counter-balanced crankshafts, but for the present, at least, most designers do not use this type of construction.

In the majority of cases, each crank-throw is supported between two main bearings. It is customary to make the crankshaft main bearing diameter 0.55 to 0.67 per cent of the engine bore; the latter figure would insure a stiffer shaft. The journals and pins are usually of the same diameter, although the latter may be made smaller.

The main bearing centers may be separated 1½ to 2¼ times the cylinder bore; twice the cylinder bore would be good average practice.

For disk-type crank-cheeks, Fig. 328, a thickness of from 0.3

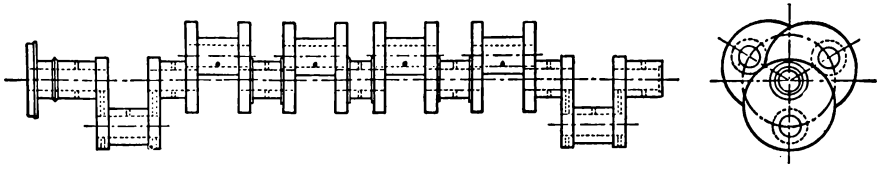

FIG. 328.—6-Cylinder, 7-Bearing Disk Crankshaft, High-Speed Type.

to 0.35 of that of the main bearing diameter is customary; for rectangular throws, Fig. 327, when used with medium-speed high compression (15:1 or over) Diesel engines, a cheek thickness of 0.25 and a cheek width of 0.8 to 0.9 of that of the cylinder bore is frequently used. Such dimensions make for sturdy shafts, but limit the maximum speed of the engine. A crank design that has given excellent service in a medium-speed automotive Diesel engine (1500 r.p.m.) is shown in Fig. 326.

The bearings are all 2.17 in. diameter; the cheeks are 1.18 in. thick (h) and 2.92 in. wide (b). The crankshaft is of 6.88-in. stroke, 3.44-in. radius (r) and is used with an engine of 4.94-in. bore. The compression ratio of this engine is 15½ to 1.

An example of a counter-balanced crankshaft is shown in Fig. 329. This type of shaft is just as necessary in high-speed Diesel engines as in gasoline engines. Therefore, as the maximum speed of Diesel engines increases, this type of shaft will come into more general use.

In order to reduce the torsional vibration set up by the high maximum cylinder pressure, the crankshafts used in automotive Die-

FIG. 329.—8-Cylinder, 5-Bearing High-Speed Crankshaft, Counter-balanced.

sel engines are much heavier than the conventional gasoline engine crankshaft. In Fig. 330 is shown a comparison of the crankshafts

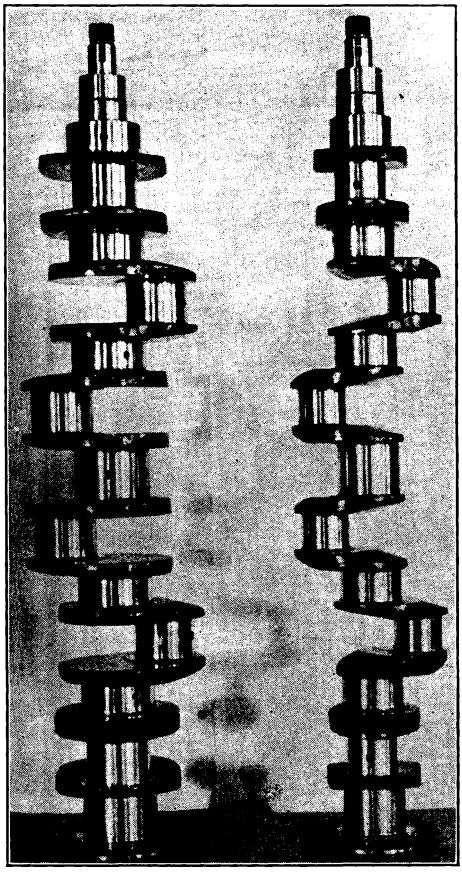

FIG. 330.—Diesel and Gasoline Engine Crankshaft.

used by the Hercules Motor Corporation in their DJXB Diesel engine (left) and that used in their gasoline engine of approximately the same size. The Diesel engine has a 3½-in. bore and 4½-in. stroke. The crank-pin diameter is 2 in. in the gasoline engine and 2½ in. in the Diesel, while the main journals are 2½ in. and 3 in. in diameter respectively. The bearing lengths are the same on the two shafts.

VALVES

The valve-in-head design is practically standard in Diesel engine practice, since even many 2-cycle engines feature aspiration or exhaust through poppet valves in the cylinder head, the piston-controlled ports in the lower end of the cylinder being used for either aspiration or exhaust.

FIG. 331.—Alloy-Steel Diesel Engine Valve.

Modern Diesel engines demand the utmost in material and workmanship; the valves are therefore of alloy steel—chrome or chrome-vanadium—and are well proportioned for strength. A typical valve is shown in Fig. 331.

As outlined in previous chapters, turbulence is of prime importance in Diesel-engine practice, especially with open chambers, and designers have attained this condition in various ways. The requirements for turbulence may be met by shrouding the intake valve,

Fig. 332. The effect of shrouding the intake valve is shown in Fig. 333.

That the shrouded valve imparts a whirling motion to the air

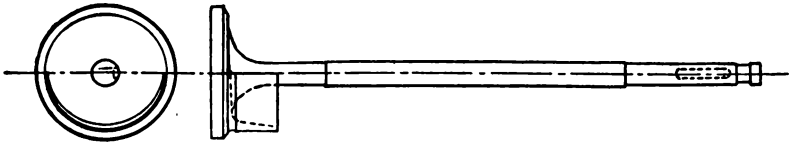

FIG. 332.—Shrouded Intake Valve.

stream is manifest. Whether or not the air remains in motion after the closing of the intake valve was unknown until, after exhaustive tests, it was shown that after the opening of the valve the

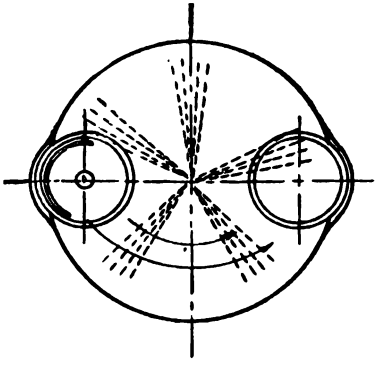

FIG. 333.—Turbulence, Shrouded Intake Valve.

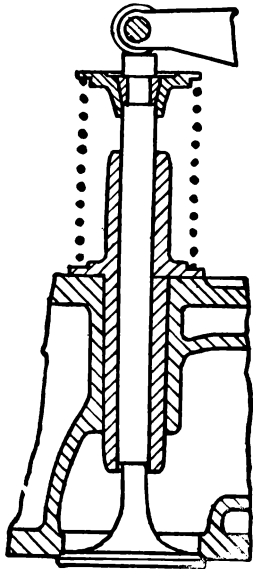

FIG. 334.—High-Speed Diesel Valve Design.

air enters in spirals rather than in circular motion, and after the closing of the valve, the spiral motions of the air stream continue until the piston reaches top-dead-center; then the air travels in strictly circular motion. Measurements have indicated that at

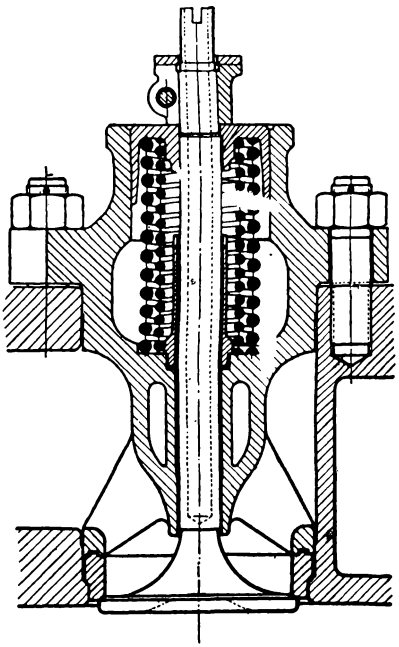

FIG. 335.—Water-Cooled Valve Cage.

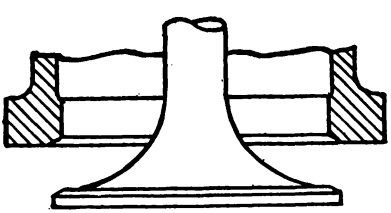

FIG. 336.—Valve Seat with 30 Deg. Bevel.

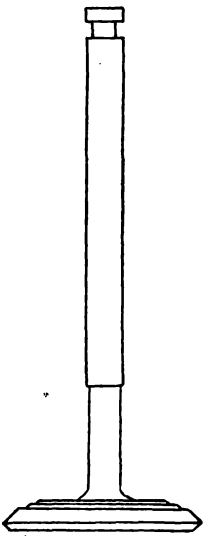

FIG. 337.—Valve Stem of Reduced Diameter.

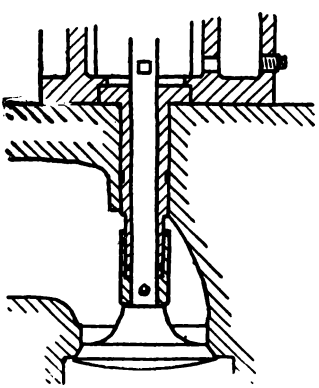

FIG. 338.—Skirted Valve Stem.

T.D.C. of the piston, the air still retains 30 per cent of the maximum rotary velocity obtained during the intake stroke.

The shrouded valve, while producing the necessary degree of turbulence, does so at an appreciable loss of volumetric efficiency. Such valves are being used in some slow-speed engines and are giving fairly satisfactory results in these applications. For high-speed engines such a valve construction entails too great a loss, in that it restricts the breathing capacity of the engine so much that the power-output drops materially.

For high-speed Diesel engines the valves are set directly in the cylinder head, Fig. 334. Removable valve cages, so prevalent with low-priced gasoline engines, are not favored for Diesel engines, except for those of very large size. Whenever valve cages are used in Diesel engines, the exhaust valve stem guides are provided with water cooling, Fig. 335, to assure reliable operation with this type of construction.

Valve seat inserts of tool steel, stellite or other hard wear and heat-resistant material, of the automotive gasoline engine type, are gaining favor in medium and high-speed Diesel engines.

Beveling the seats of valves has been standard practice for years; the flat seat, due to the difficulty of maintaining air-tightness, has been abandoned. The usual angle of bevèling is 45 deg., which may be termed standard practice, although as steep a bevel as 60 deg. has been used in isolated cases. For Diesel engines, a bevel of but 30 deg. is finding favor and may soon become universally accepted. A valve with the flat 30-deg. bevel is shown in Fig. 336.

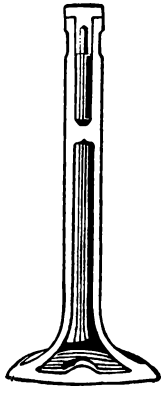

FIG. 339. — Hollow Sodium-Cooled Valve.

Exhaust valves are subjected to carbon deposit which may collect and adhere on the lower end of the stem just above the head. Excessive carbon deposits prevent the valve from closing properly—or at all; hence designers provide for this occurrence. In Fig. 337 is shown a valve stem having a reduced diameter at its lower end, which thus does not come in contact with the

valve guide and thereby provides a space for the possible collection of carbon deposits.

A novel scheme to prevent carbon collections at the valve stem is that illustrated in Fig. 338. As will be observed, the skirt is pinned to the valve stem, the upper part of the skirt encircling the valve-stem guide, thus preventing the collection of carbon from interfering with the operation of the valve.

The exhaust valve, being subjected to greater heat than the intake valve is sometimes provided with sodium cooling, especially in air-cooled airplane engines. Fig. 339 illustrates a valve design of the hollow-stem type. The cavity within the head and stem is partially filled with sodium which is an aid in cooling the valve and thus prevents warping.

CHAPTER 15

MISCELLANEOUS

The speed of Diesel engines is controlled by varying the quantity of fuel injected per stroke, and usually this control acts directly on the fuel pump. The controlling device may be actuated by a hand throttle or by a mechanical governor. The first is used where the engine is positively connected to its load as in automotive, marine or aircraft applications. The exact method of such control of the fuel supply varies with the type of pump used, as already described in Chapter VI.

Governors are generally used in stationary applications where it is desired to maintain practically constant speed throughout the entire range of load. Most governors are actuated by changes in centrifugal force arising from changes in speed, but pressure in the inlet manifold, or any other available force that can be arranged to control the quantity of fuel, may also be used.

GOVERNORS

The governor in its action is similar to a tachometer, since it assumes a definite position for each engine speed. Instead of a tachometer hand there is a lever which transmits the movements of the governor to a device acting on the fuel supply. The quantity of fuel injected is corrected as the governor indicates over-speed or under-speed.

The principal characteristics desired in a governor are: (a) sensitiveness; (b) power and (c) stability. In response to a change in speed the governor must change its position accordingly. This change cannot be made instantaneously; the governor is said to be sensitive if it is quick in making the change, and sluggish if it is not. The engine speed must necessarily change with the load. A governor is said to give close regulation when there is small difference be-

tween the no-load and the full-load speeds. The regulation may be expressed thus:

$$\% \text{ regulation} = \frac{100\,(N_1 - N_2)}{N}$$

where:

N_1 = speed at no load,
N_2 = speed at maximum load,
N = speed at normal load.

N and N_2 will be the same in engines with no overload capacity. It is possible to design an ideal governor to give the same engine speed at all loads. Such a governor is said to be isochronous, since at the operating speed it will assume indifferently any speed within its operating range. Friction would prevent any actual governor from being truly isochronous, but in any case it would have no practical value. It would hunt badly; that is, it would keep up a constant fluctuation in speed as the governor hunted its correct position.

The power of a governor is really the work which it is capable of doing as it moves from one position to another in response to a speed change. This power must be sufficient to operate the mechanism which controls the energy input to the machine. Most centrifugal governors exert a mean centripetal force, varying from 50 to 150 lbs., with 100 lbs. a common figure. Special cases which require larger force would result in an abnormally large or heavy governor, and a relay may be interposed. The governor then controls movements of the relay, which in turn controls the position of a power piston by regulating the quantity of oil supplied to its cylinder.

A governor is said to be stable when the no-load speed is greater than the full-load, and when it occupies a definite position for each speed within its working range. An isochronous governor or one which tends to give a full-load speed higher than no-load would be unstable.

The centrifugal force of rotating weights is supplied by a load, which may be produced by a spring or weight. Weight-loaded governors are seldom used. The inertia of the mass makes the governor sluggish and the load increases friction and contributes to insensitiveness. In a spring-balanced governor the spring tension supplies the force required to produce normal acceleration in one or more weights as they revolve about a shaft. This force is given by:

$$F = W/g\, a_n = 4\pi^2\, W/g\, r\, n^2$$

where r is the radius of the center of gravity of the weight in feet and n represents r.p.s. of the shaft.

In Fig. 340, straight lines show the relationship between F and r for three different speeds, no-load, normal and full load. In Fig. 341 there has been superposed on these curves the straight line representing the force exerted by the spring as one extremity is displaced toward the right by the increasing radius of the weight. The spring is proportioned so that the force which it exerts is zero when

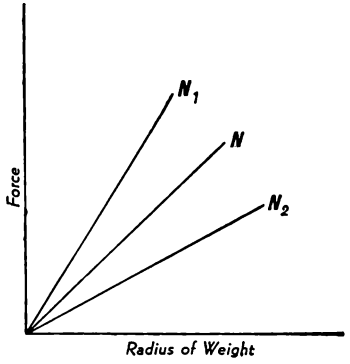

FIG. 340—Force—Radius Diagram

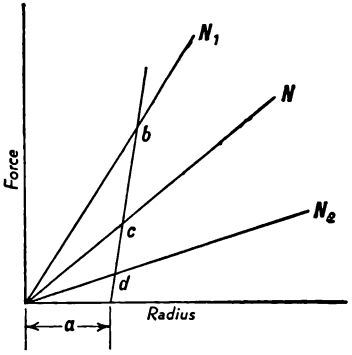

FIG. 341.—Force Radius vs. Spring Diagram.

the radius of the weight is a. For the three speeds represented the spring force equals F at b, c, and d (Fig. 341).

If a is made zero, it is seen that spring force can be made to equal centrifugal force at only one speed and the governor would approach isochronism. Making a negative produces an unstable governor.

If S_1 is the spring pull and e_1 the spring elongation at the point b and S_2 and e_2, the corresponding values at point d, then the scale of spring is given by: $K = \left(\frac{S_1 - S_2}{e_1 - e_2}\right)$. But this spring force must supply the centrifugal force at any speed within the operating range, so that $F_1 = mS_1$, and $F_2 = mS_2$. m is the ratio of the extension of the spring to the increase in radius of rotation of the weight, since in the usual governor construction this ratio will be different from ???.

Let r_1 be the radius of rotation of the weight at b, and r_2 at d, then $m(r_1 - r_2) = e_1 - e_2$, and the spring scale may also be expressed as $K = \frac{F_1 - F_2}{m^2(r_1 - r_2)}$

Actual governors have some degrees of internal friction and, accordingly, have two equilibrium positions for any speed. In moving toward the true position, the governor comes to rest before the position is reached, or when friction plus spring force supply the required centrifugal force. In sensitive governors this friction is kept small compared to the spring force. Sensitive governors are not ordinarily fitted to Diesel engines, since they would be unduly affected by the cyclical speed variations occurring on each revolution. These variations are the result of an uneven turning effort and are greater on engines with few cylinders and light flywheels. The friction inherent in the governor will limit governor oscillations produced by such variations, and tend to produce a more nearly constant speed.

The disadvantage of this means of solution of the governor problem lies in the fact that the force of friction opposing motion, when the governor is at rest, is greater than when moving. An excessive speed change is required to exert a force sufficient to overcome initial friction. When this is once exerted, the governor moves rapidly to a position beyond its true one and is very likely to hunt badly.

A better solution might be to absorb the cyclical variations in angular speed by interposing a flexible drive between the governor spindle and its driving shaft. The governor used is inherently sensitive but its action is slowed by the flexible drive. This in effect produces a relatively insensitive governor action, but one which is not subject to over-travel, and, therefore, to hunting.

The Diesel Engine Manufacturers' Association has adopted certain tentative standards of engine design which include the following specifications for centrifugal governors:

1. Regulation. (a) For gradual load changes, engine speeds will be held to a maximum variation of 3% above or below mean speed at all loads up to the maximum rating of the engine. (b) For sudden load changes: the same as (a) above, except that the maximum variation is made 5% in cases where engines are to drive generators in parallel.

2. Stability. The period required for stabilization will not exceed 20 seconds. The governor should not hunt on constant load,

and with load changes there should be no persistent over-travel. For relay-powered governors the requirements are similar to those above, except that the stabilization period is reduced to 10 seconds and the sensitiveness of 1/100 of 1%.

3. Sensitiveness. Sensitivity is defined as the speed change in percentage of present speed required to produce governor response and is not to exceed ¼ of 1%.

COOLING SYSTEMS

In a Diesel engine some 35 to 45 per cent of the heat supplied in the fuel is converted into work in the cylinder. Thirty to 37.5% of the total appears as useful work, the rest having been reconverted to heat by engine friction. Thus some 60 to 70% of the heat supplied must be dissipated to the atmosphere at once. A small part is lost by radiation and convection to the surrounding air. The larger part is rejected to the exhaust gases. What is left, varying from 18 to 25% of the total supplied, must be carried away by the cooling system. In cases where the exhaust manifold is cooled this percentage may rise above thirty.

For an average case of an engine developing a b.hp. hr. at full load on .38 of a pound of fuel of heating value 18,000 B.t.u. and rejecting 25% of this to the cooling system, the quantity of heat so rejected amounts to 1710 B.t.u. per b.hp. hr. At no load the fuel per hour will be about ⅙ of that at full load and perhaps ⅔ of the heat supplied will be rejected to the cooling system. The expected heat rejection to the cooling system for various engine loads is shown by the following:

Engine Load	B.t.u. per hr. per full load B.hp.
0	760
¼	1000
½	1240
¾	1470
1	1710
1¼	2180

The cooling medium is usually water, though lubricating oil is often used for piston cooling. Water has the advantages of cheap-

ness, availability, high specific heat, and high rate of heat transfer from cooling surfaces.

Direct Cooling. In the simplest cooling system water passes through once and is then rejected to waste. Such a process is feasible only if there is available a large and inexpensive supply of suitable soft or sea water. It is better to recirculate a part of the discharge where cold supply water is used so that the water outlet temperature may be kept high enough for satisfactory operation and still obtain vigorous circulation of the cooling water and avoid large temperature differences in the water jacket.

In marine work, sea water is often used as a direct cooling medium. To avoid excessive scale deposits in the engine parts operating at higher temperatures, particularly the cylinder heads, the outlet temperature should not exceed 120 deg. F. Sodium salts in sea water do not give as much trouble as the salts of magnesium, calcium, aluminum, and iron. Deposits of these salts insulate the metal surfaces and seriously retard the flow of heat.

Where fresh soft water is available in abundance, outlet temperatures may be raised to 140 deg. F. in large engines and even to 180 deg. F. in small engines (not over 6 in. cylinder diameter). The hot water discharged may be used for process work or for boiler feed, but in every case inlet temperatures should be maintained by a recirculation of part of the discharge.

If the fresh water supply is hard it may be softened by passing it through layers of zeolite which replaces the salts of Mg, Ca, Al, and Fe with sodium. The zeolite is renewed by passing through it a solution of common salt. Frequent inspection and testing is required to make certain that the water remains free from undesirable salts and that the engine jacket is free from scale. Scale may be removed from engine jackets by treatment with an acid solution.

Raw Water or Open System. This system is suitable only for stationary plants where the cooling water is of good quality but limited in quantity or high in cost. Such a system is shown diagrammatically in Fig. 342. Water is recirculated through this system and is cooled by a pond, or by a spray or cooling tower. Tem-

peratures may be controlled by a provision for cutting out part of the spray or cooling tower when required. Cooling is accomplished by evaporation of part of the water, so that, as make-up water is added from the raw source, any hardness in the supply is increased

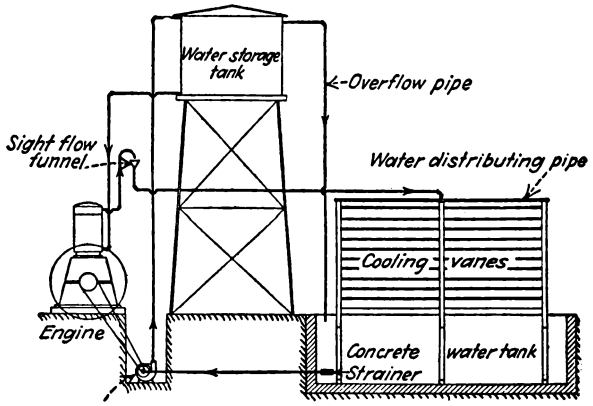

FIG. 342.—Cooling Water System, Open Type.

in concentration. The supply must be sufficiently free from objectionable salts to permit operation for a reasonable length of time before this concentration is increased to the point where trouble may be expected. Before this point is reached the system must be drained and refilled with fresh water.

Closed System. The cooling water circulates in a closed system with little or no evaporation, and the heat is dissipated to the air directly by a radiator, or indirectly by a heat exchanger using water from another source. In the radiator form it is common on portable units of all kinds, where its use is dictated by convenience. It is used on small stationary engines for the same reason.

Where the available supply of cooling water is of poor quality this system is used, whether the supply is plentiful or scarce. It is common on larger installations to use rain or distilled water in the closed system where its loss will be slight. The cooling water is passed through a heat exchanger, where it is cooled in turn by raw water. The raw water may be wasted or if not plentiful can be sent through a spray pond or cooling tower.

Figure 343 shows such a system using a pipe cooler for the pure water and a cooling tower for the raw. The quantity of raw water circulating may be varied to control temperatures. It is common practice to allow about 3 sq. ft. of transfer surface in the exchanger per.hp. In pipe coolers this amounts to about 5 feet of 2-in. pipe.

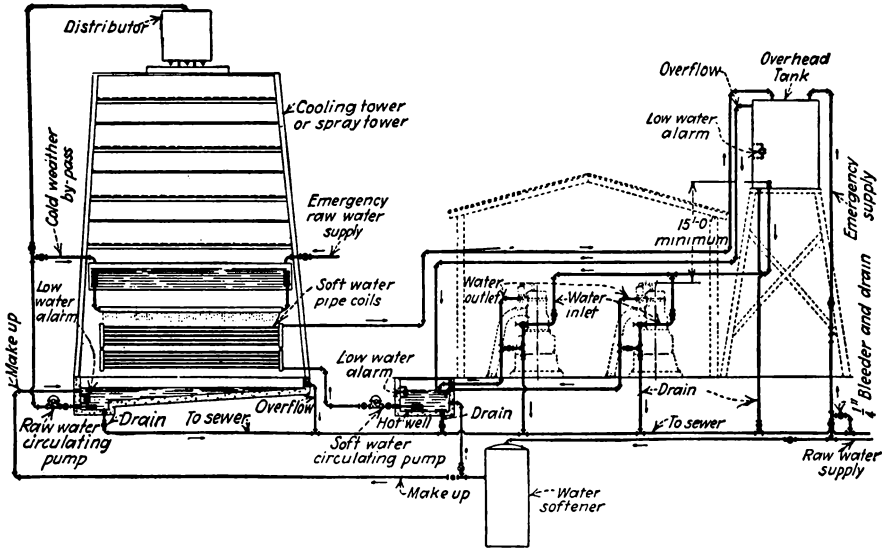

FIG. 343.—Cooling Water System, Closed Type.

BALANCE

Static Balance. When the center of gravity of a body that is free to rotate lies in its axis of rotation, the body is said to be statically balanced. It will then remain indifferently in any position to which it may be turned. The two-throw crankshaft in Fig. 344 is in static balance if accurately machined. This condition is met when

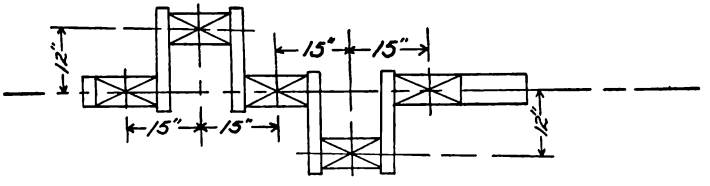

FIG. 344.—Balance, 2-Throw Crankshaft.

the moments about the axis of rotation of the weights of all particles making up the body are zero. This is stated mathematically by:

$$\Sigma(\Delta W r \cos \theta) = 0$$

and,

$$\Sigma(\Delta W r \sin \theta) = 0$$

where, ΔW is the weight of any particle,
r is its distance from center of rotation,
θ is the angle between r and the horizontal.

Thus for static balance two equations must be satisfied. Any body may be balanced statically by the addition—or, of course, removal—of a single weight. If the weight to be added is arbitrarily chosen the radius and angle are found by the equations above. The radius may equally well be taken arbitrarily and the weight solved for.

Rotating bodies, the mass of which is largely concentrated in a single plane, need meet only the conditions of static balance. In this class are gears, flywheels, propellers, etc.

Dynamic Balance. When the bearing reactions of a rotating body are independent of its speed of rotation, the body is said to be dynamically balanced. The center of gravity of the body must lie in its axis of rotation and the summation of moments acting on the body about any axis at right angles to the axis of rotation must be zero. In addition to the conditions set up for static balance this statement requires the addition of the following:

$$\Sigma(\Delta W r \cos \theta z) = 0$$

$$\Sigma(\Delta W r \sin \theta z) = 0$$

where z is the distance from a plane through the particle at right angles to the axis, to the plane of reference.

It can be shown that a rotating body may be brought into dynamic balance by the addition of two weights. Usually the planes in which the weights are to be added—or subtracted—are fixed by the construction of the body. This will determine the value of z for the weights to be added. The four equations can then be used to

determine the four unknowns: θ_1; θ_2; $(W_1 r_1)$; $(W_2 r_2)$. Then either the weights or their radii may be chosen to suit conditions.

The crankshaft of Fig. 344 is evidently not balanced dynamically. It can be made so by the addition of two weights which will supply a centrifugal couple in the same plane as the cranks, and opposite to the couple exerted by them.

Reciprocating Balance. Single Cylinder Engine.—In every reciprocating machine forces must act upon the reciprocating parts to accelerate them from a stop to their maximum speed and decelerate again to a stop—twice each revolution. An analysis of the forces required to accelerate the parts of a slider crank assembly shows that it is not possible to balance completely reciprocating forces with rotating weights. The total force, in pounds, which must act in the horizontal direction on the reciprocating parts shown diagrammatically in Fig. 345 is given by:*

$$F = -\omega^2 R \frac{W_1 + \frac{b}{L} W}{g} \left(\cos\theta + \frac{R \cos 2\theta}{L} \right)$$

where, ω = angular velocity of crank in radians per sec.
W_1 = weight in pounds of purely reciprocating parts, such as: piston, piston-rod, crosshead.
W = weight of connecting rod

and other symbols have the meaning shown in Fig. 345. This expression gives the force corresponding to any crank angle θ for the reciprocating parts. In addition the crank and its pin and a part of the connecting rod are rotating which require the following horizontal force:

$$F'_x = -\frac{\omega^2 R}{g} \left[W_2 + \left(1 - \frac{b}{L} \right) W \right] \cos\theta$$

and vertical force:

$$F'_y = -\frac{\omega^2 R}{g} \left[W_2 + \left(1 - \frac{b}{L} \right) W \right] \sin\theta$$

where W_2 weight of purely rotating parts as crank, crank-pin, etc.

* Albert, Machine Design Problems.

It will be noted that the equation above for F_x involves two terms, one proportional to cos θ, which is referred to as the primary term, and the second proportional to cos 2θ and called the secondary term. Actually these terms represent the first two in an infinite series which is rapidly converging, so that the discarding of higher terms introduces an error in the unbalanced force of less than ¼%

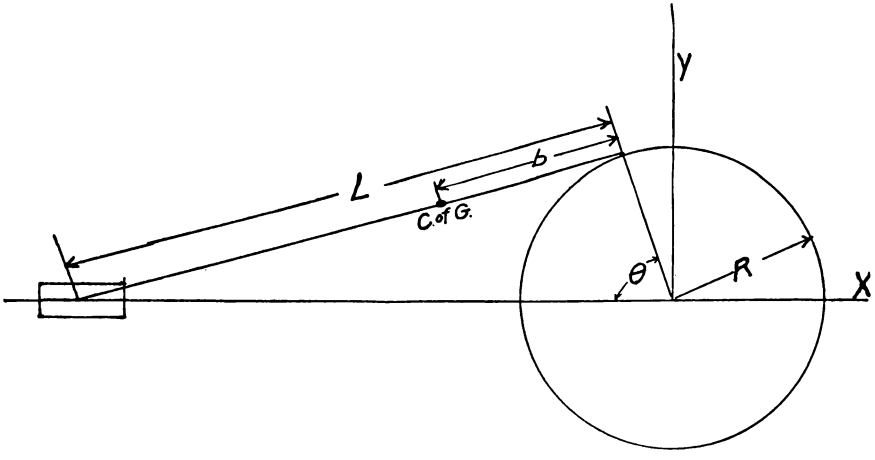

FIG. 345.—Forces of Reciprocating Parts.

when $L/R = 4$. For smaller values of L/R the error will be larger, though in all cases small values of these higher harmonics are always present.

An inspection of these equations shows that only another reciprocating mass will completely balance F_x. A rotating mass could be added which would completely balance the primary portion of the horizontal forces but, of course, would introduce an unbalanced vertical force of the same amount, for an engine mounted as in Fig. 345.

MULTI-CYLINDER ENGINE

The reciprocating mass required to balance a single cylinder is most easily provided by the addition of another cylinder. A two-cylinder opposed engine is balanced as to all reciprocating forces including, of course, all higher harmonics. A two cylinder vertical engine with cranks 180° apart is balanced as to the primary force but unbalanced for higher harmonics. The crankshaft is subjected to a

bending couple whose value is obtained by multiplying the value of a single unbalanced force by the distance between the center lines of the cylinders.

Balancing is not helped by using four cylinders 180° apart since it is essentially the same condition as in the two-cylinder engine. The first harmonic is balanced, but the second, rotating at double engine speed, coincides in each cylinder producing a rather severe vertical vibration at twice engine speed. Higher harmonics also add but have greater frequencies and smaller forces.

The six-cylinder engine with cranks 120° apart provides complete balance of all harmonic forces up to the sixth. This last is completely unbalanced and the effect of all cylinders add, but fortunately its value is quite low and its frequency high.

The eight-cylinder engine either in line or V-type with cylinders 90° apart is balanced up to the fourth harmonic, but this is not serious, since the torque variations due to power impulses are lowered by the increased number of cylinders. Table A shows the inherent balance of various types of engines.

TABLE A

Cylinder arrangement	Crank arrangement	Primary forces	Secondary forces	Fourth Harmonic
Single cylinder	.....	Unbalanced [1]	Unbalanced	Unbalanced
2-cylinder opposed	180°	Balanced	Balanced	Balanced
2-cylinder in-line	180°	Balanced	Unbalanced	Unbalanced
3-cylinder in-line	120°	Balanced	Balanced	Balanced
4-cylinder in-line	90°	Balanced	Unbalanced	Unbalanced
6-cylinder in-line	120°	Balanced	Balanced	Balanced
7-cylinder radial	single	One half balanced [2]	Balanced	Balanced
8-cylinder V-type	90°	Balanced	Balanced	Unbalanced
8-cylinder in-line	90°	Balanced	Balanced	Balanced
9-cylinder radial	single	One half balanced [2]	Balanced	Balanced

[1] One half of primary may be balanced by counter-weights.

[2] Other half of primary may be balanced by counter-weights.

No crankshaft moments are presented in the radial engine but are present, of course, in in-line or V-type engines. In engines with long crankshafts the stresses which these moments introduce must be taken into account.

VIBRATION

The essentials of a free elastic system are: (a) a mass, and (b) a spring. The simplest system consists of a weight suspended on a coil spring, but the spring might be as well a block of rubber or cork, a beam of elastic material (steel or wood) in bending, or a steel shaft in torsion with the flywheel as the vibrating mass. Any disturbance of the condition of equilibrium in such a system results in unbalance between the load and the elastic forces of the spring, which produces vibrations. These continue until damped out by friction or other opposing forces.

The time required for one complete vibration in such a free system is called the period and is a constant given by:

$$t = \frac{1}{f} = 2\pi\sqrt{\frac{W}{gS}} = 2\pi\sqrt{\frac{\delta}{g}}$$

where: t = period in seconds,
f = frequency in vibrations per second,
W = weight of moving part in pounds,
S = scale of spring,
g = acceleration due to gravity,
δ = static deflection of spring under weight W.

S and g must be in corresponding units. If S = pounds to produce one foot deflection of spring, then g = 32.2 ft. per sec.^{2}

Any periodic disturbing force, such as unbalance in rotating parts will set the system in vibration, and the amplitude of this vibration will depend upon the frequency as well as the magnitude of this force. When the frequency of the periodic applied force is equal to the natural frequency of the system a condition of resonance results and the amplitude builds up rapidly. It is held to a finite value only by the application of the damping forces of friction or of various devices added for this purpose.

The speed at which resonance occurs is called a critical speed, and since we have seen that there are an infinite number of harmonics in the disturbing forces due to unbalance of reciprocating forces in a single cylinder, there will be a critical speed corresponding to each of these. The disturbing forces of the higher harmonics are low and only those will be serious which have magnitudes sufficient to produce large stresses in moving parts or marked vibrations of foundation or frame.

Table A shows that secondary forces in a 90° four-cylinder engine are unbalanced and these forces add to produce a combined effect four times that of a single cylinder. The frequency of those forces will be twice engine speed and they are often of sufficient magnitude to produce serious disturbances of the foundations. Should the natural period of the engine on its foundation or of the flywheel on its shaft coincide with the frequency of the forces, a large amplitude will result which will almost certainly produce failure of some part if sufficient time is allowed. The fourth harmonic will have a frequency four times the engine speed, but this critical will be less because of the diminished periodic forces. In the six-cylinder engine the sixth harmonic is the lowest unbalanced one and it will have a much lower magnitude.

Torsional Vibration. The natural period of the torsional vibration of a flywheel or other single rotating mass on its shaft is given by:

$$t = 2\pi\sqrt{\frac{I}{K}}$$

where: I = moment of inertia of rotating mass about shaft.

K = torque required to produce an angle of twist of 1 radian.

I is defined as $\int_0^r r^2 dM$, which in a solid uniform disk integrates to, $\frac{Wd^4}{8g}$, where W is the weight and d is the diameter of the disk. K for a solid shaft is given by:

$$K = \frac{\pi d_s^4}{32}\frac{G}{l}$$

where d_s is the diameter of the shaft,
l is the length of the shaft,
G is the modulus of rigidity, or shearing modulus, of the shaft.

Shafts with two or more rotating masses require different analyses and the number of degrees of freedom corresponds to the number of rotating masses. One of these degrees of freedom corresponds to uniform rotation, so that the number of natural frequencies to be solved for is one less than the number of masses. The rotating and reciprocating parts of a slider crank mechanism may be approximated by the moment of inertia of a single rotating mass by methods set forth by Prof. S. Timoshenko.* Also the crank must be reduced to a single shaft whose torsional rigidity may be computed.

The engine cylinders, the flywheel and any other rigidly connected bodies, such as generator rotors, propellers, compressor cylinders, etc., form separate masses of the same vibrating system which must be treated as a unit in calculating natural frequencies. Usually only the first or second of these frequencies will be low enough to give trouble by resonance with the frequency of an impressed force. It must also be remembered that periodic impressed forces may come not only from unbalance of moving parts but very large values of such forces are produced by the variation of gas pressure in the cylinder during one rotation. By an analysis of typical Diesel engine cards, Prof. F .M. Lewis † has produced curves from which the values of these periodic forces due to gas pressure may be computed.

The process of computation involves first the calculation of the natural periods of torsional vibration, for which the two lowest modes usually suffice. In a constant speed engine the operating speed should be such as to keep safely away from criticals. At any operating speed the amplitude of vibration due to the disturbing forces of various frequencies may be calculated.

In a variable speed engine the entire operating speed range should be free of criticals, but if this is not feasible, the amount of damping which must be provided to prevent excessive amplitudes may be calculated.

* Vibration Problems in Engineering, D. Van Nostrand.
† Trans. Soc. Naval Arch. and Marine Engineers, 1925, vol. 33, p. 109.

Vibration Prevention. It is possible to prevent the lateral disturbances, arising from periodic forces developed by unbalance, from reaching the engine foundation by a process of isolation. Assume the engine to be supported on springs whose scale is such as to make the natural period of vibration of the engine mass large. Then, a relatively high frequency disturbing force will produce very small amplitudes, even if the disturbing force should be large. The engine foundation may be isolated from the building or other foundations by interposing a cork mat. The characteristics of this mat must be such as to produce low frequencies of the entire mass which it supports.

The presence of torsional vibrations is manifested by rough operation of the engine and, if severe, by broken crankshafts. Engine builders investigate an application carefully and by changing crankshaft sizes, location or weight of flywheel or other rotating masses, are usually able to keep dangerous criticals out of the operating range. In some constant speed engines a critical may be passed through in bringing the engine up to speed. This is not desirable if it can be avoided, but if the time of operation at the critical is not sufficient to build up large amplitudes the installation will be satisfactory.

It is possible to add devices to the shaft for the purpose of increasing the natural damping forces and of limiting maximum amplitudes. Such dampeners usually act by absorbing the energy of vibration by friction. A simple type uses friction disks held together by springs and supporting a flywheel on the shaft. If the angular velocity of the shaft changes, the flywheel tends to continue, and the resulting motion absorbs vibration energy in friction. Other types utilize hydraulic friction for the same purpose. It is also possible to use devices consisting of spring-controlled weights which at the critical speed materially change their radii of rotation, thus changing the moment of inertia of the device which in turn changes the natural frequency of the system.

Such vibration dampeners have been little used on Diesel engines. Manufacturers more often depend on keeping criticals out of the operating range. Fortunately, with high speed, relatively short engines using large crankshafts, this is not hard to do.

PROBLEMS

1. Figure 346 represents a spring-balanced governor in which a weight of 20 lbs. is fastened directly to the spring. If the speed at no load is 210 r.p.m. and at full speed is 200 r.p.m., find the scale of spring in lbs. per in. What scale of spring would make the governor isochronous at 200 r.p.m.?

2. Assume a governor of the same type as in Fig. 346 but with a different mass and radius of rotation. The no load speed is 300 r.p.m. and full load 290 r.p.m. At no load the spring tension is 500 lbs. At full load the spring is 2 in. shorter than at no load. Its scale is 100 lbs. per in. Suppose the spring to be tightened by shortening it one-half inch, what would be the new no load and full load speeds?

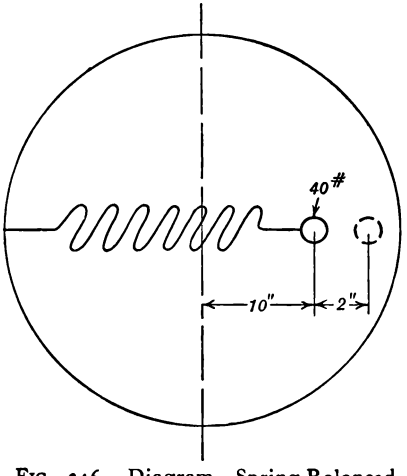

FIG. 346.—Diagram, Spring-Balanced Governor.

3. Determine the rate of flow in gallons per hour of cooling water to a 150-hp. Diesel engine operating at full load. Inlet water temperature is 60° F. and outlet water 140° F.

4. What percentage of the water fed to a spray pond is lost in evaporation if the water drops 60° in temperature? Air temperature 60° F., relative humidity 40%. Assume all heat lost by the water is due to evaporation.

5. Each crank pin of the crankshaft shown in Fig. 344 weighs 50 lbs. and each crank web weighs 150 lbs. The centers of gravity of the crank webs are 5 in. from the axis of the shaft. Find the centrifugal couple due to rotation at 150 r.p.m.

6. The crankshaft in Fig. 344 is to be balanced by four equal weights fastened to the webs so that the center of gravity of the added weights are 8 in. from the axis of rotation. Find the weights.

7. The following data applies to a single-cylinder engine which is to be partially balanced against reciprocating forces:

Diam. of piston	10 in.
Stroke	12 in.
R.P.M.	250
Length of connecting rod	30 in.
Weight of piston	190 lbs.
Weight of connecting rod	180 lbs.

Distance from center of crank pin to center of gravity of connecting rod, 9 in. Weight of crank pin plus equivalent weight of crank webs, 130 lbs.

It is required to compute balance weights so that the rotating masses shall be completely balanced and so that the primary forces of the reciprocating masses be reduced by one-half.

(a) Find the total weight of counter-weight to be placed opposite the crank pin with its center of mass at 12-in. radius.

(b) Compute the total forces acting upon the crank pin parallel and perpendicular to the crank for a total gas pressure of 18,000 lbs. and crank angle of 30°.

8. A solid steel disk 2 in. thick and 3 ft. diam. is supported on one end of a vertical steel shaft 10 ft. long and 2 in. diam. Find the natural period of torsional vibration of the disk on the shaft.

9. Assume that the disk in Prob. 8 is supported horizontally by a 3-in. shaft acting as a cantilever with free length of 8 ft. What r.p.m. of the shaft corresponds to the natural period of lateral vibration of the disk on the shaft?

APPENDIX

PISTON DISPLACEMENT IN CUBIC INCHES FOR 4 CYLINDER MOTORS
FOR 6 CYLINDERS MULTIPLY BY 1½, BY 2 FOR 8 CYLINDERS

Cylinder Bore in Inches	STROKE IN INCHES																													
	3	3⅛	3¼	3⅜	3½	3⅝	3¾	3⅞	4	4⅛	4¼	4⅜	4½	4⅝	4¾	4⅞	5	5⅛	5¼	5⅜	5½	5⅝	5¾	5⅞	6	6¼	6½	6¾	7	7¼	7½	7¾	8
2½	59	61	64	66	69	71	74	76	79	81	83	86	88	91	93	96	98	101	103	106	108	110	113	115	118	123	128	132	138	142	148	152	157
2⅝	65	68	70	73	76	79	81	84	87	89	92	95	97	100	102	106	108	111	114	116	119	122	125	128	131	134	137	140	143	148	154	160	166	172	178	184	190
2¾	71	74	77	80	83	86	89	92	95	98	101	104	107	110	113	116	119	122	125	128	131	134	137	140	143	148	154	160	166	172	178	184	190
2⅞	78	81	84	88	91	94	97	101	104	107	110	114	117	120	123	126	130	133	136	140	143	146	149	152	156	162	169	175	182	188	195	201	208
3	85	89	92	95	99	103	106	110	113	117	120	124	127	131	134	138	141	145	148	152	156	159	163	166	170	177	184	191	198	205	212	219	226
3⅛	92	96	100	104	107	111	115	119	123	127	130	134	138	142	146	150	153	157	161	165	169	173	176	180	184	192	199	207	214	222	230	238	245
3¼	100	104	108	112	116	120	124	129	133	137	141	145	149	153	158	162	166	170	174	178	183	187	191	195	199	207	216	224	232	240	249	257	265
3⅜	107	112	116	121	125	130	134	139	143	148	152	157	161	165	170	175	179	183	188	192	197	201	206	210	215	224	233	242	251	260	268	277	286
3½	115	120	125	130	135	140	144	149	154	159	164	168	173	178	183	188	192	197	202	207	212	217	221	226	231	241	250	260	269	279	289	298	308
3⅝	124	129	134	139	145	150	155	160	165	170	176	181	186	191	195	201	206	211	217	222	227	232	237	243	248	258	268	279	289	299	310	320	330
3¾	133	138	144	149	156	160	166	171	177	182	188	193	199	204	210	215	221	226	232	237	243	249	254	260	265	276	287	298	309	320	331	342	353
3⅞	142	147	153	159	165	171	177	183	189	195	200	206	212	218	224	229	236	242	248	253	260	265	271	277	283	295	307	318	330	342	354	366	377
4	151	157	163	170	176	182	189	195	201	207	214	220	226	233	239	245	251	258	264	270	277	283	289	295	302	314	327	339	352	364	377	390	402
4⅛	160	167	174	180	187	194	201	207	214	221	227	234	241	247	254	261	267	274	281	287	294	301	307	314	321	334	348	361	374	388	401	414	428
4¼	170	177	184	191	199	206	213	220	227	234	241	248	255	262	269	277	284	291	298	305	312	319	326	333	340	355	369	383	397	411	426	440	454
4⅜	180	188	195	203	211	218	226	233	241	248	256	263	271	278	286	293	301	308	316	323	331	338	346	353	361	376	391	406	421	436	451	466	481
4½	191	199	207	215	223	231	239	247	255	262	270	278	286	294	302	310	318	326	334	342	350	358	366	374	382	398	414	429	445	461	477	493	509
4⅝	202	210	218	227	235	244	252	260	269	277	286	294	302	311	319	328	336	344	353	361	370	378	386	395	403	420	437	454	470	487	504	521	538
4¾	213	222	230	239	248	257	266	275	284	292	301	310	319	328	337	346	354	363	372	381	390	399	408	416	425	443	461	478	496	514	532	549	567
4⅞	224	233	243	252	261	271	280	289	299	308	317	327	336	345	355	364	373	383	392	401	411	420	429	439	448	467	485	504	523	541	560	579	597
5	236	245	255	265	275	285	295	304	314	324	334	344	353	363	373	383	393	403	412	422	432	442	452	461	471	491	511	530	550	569	589	609	628
5⅛	248	258	268	279	289	299	309	320	330	340	351	361	371	382	392	402	413	423	433	444	454	464	475	485	495	516	536	557	578	598	619	640	660
5¼	260	271	281	292	303	314	325	336	346	357	368	379	390	400	411	422	433	444	455	465	476	487	498	509	520	541	563	584	606	628	649	671	693
5⅜	272	284	295	306	318	329	340	352	363	374	386	397	409	420	431	443	454	465	477	488	499	511	522	533	545	567	590	613	635	658	681	703	726
5½	285	297	309	321	333	345	356	368	380	393	404	416	428	440	451	463	475	487	499	511	523	535	546	558	570	594	618	641	665	689	713	736	760
5⅝	298	311	323	336	348	360	373	385	398	410	422	435	447	460	472	485	497	509	522	534	547	559	572	584	596	621	646	671	696	721	746	770	795
5¾	312	325	338	351	364	377	390	403	416	429	441	454	467	480	494	506	519	532	545	558	571	583	597	610	623	649	675	701	727	753	779	805	831
5⅞	325	339	352	366	380	393	407	420	434	448	461	474	488	502	515	529	540	556	569	583	596	610	623	637	651	678	705	732	759	786	813	840	867
6	339	354	368	382	396	410	424	438	452	467	481	495	509	523	537	551	566	580	594	608	622	636	650	664	679	707	735	763	792	820	848	876	905
6¼	368	384	399	414	430	445	460	476	491	506	522	537	552	568	583	598	614	629	644	660	675	690	706	721	736	767	798	828	859	890	920	951	982
6½	398	415	431	448	465	481	498	514	531	548	564	581	597	614	630	647	664	680	697	713	730	747	763	780	796	829	863	896	929	962	995	1029	1062
6¾	429	447	465	483	501	519	537	555	573	590	608	626	644	662	680	698	716	734	752	769	787	805	823	841	859	895	930	966	1002	1038	1074	1109	1145
7	462	481	500	520	540	559	578	597	616	635	653	672	692	711	731	750	770	789	809	828	847	867	886	904	923	962	1001	1040	1079	1118	1156	1194	1232
7¼	495	516	537	558	579	599	620	640	661	681	702	723	743	768	785	806	827	848	868	889	910	930	950	970	991	1016	1067	1118	1159	1199	1240	1280	1321
7½	530	552	574	597	619	640	662	685	707	729	750	772	795	818	840	862	884	908	929	950	972	994	1017	1040	1060	1104	1153	1196	1240	1283	1326	1372	1418
7¾	566	590	613	636	660	683	707	730	754	778	801	825	849	873	897	920	943	968	990	1017	1039	1062	1084	1107	1132	1179	1224	1272	1320	1368	1414	1460	1506

BIBLIOGRAPHY

BARDIN, René, *Les Moteurs a Cumbustion Diesel et Semi Diesel,* 1929.

BIELEFELD, F. Ernst, *Die Patente über Vorkammer Dieselmaschinen,* 1932.

CLAFTEN, Berthold, *The Airchamber Diesel Engine,* 1936.

DIESEL, Rudolf, *Die Entstehung des Dieselmotors,* 1913.

FÖPPL, Strombeck & Ebermann, *Kompressorlose Dieselmaschinen,* 1929.

HAUSFELDER, Ludwig, *Die Kompressorlose Dieselmaschine,* 1928.

JUNNER, McKenzie, *Compression Ignition Engines,* 1932.

KÖHLER, Otto, *Theorie der Gasmotoren,* 1887.

KRAYN, M., *Automobil Kalender,* 1901.

KREGLEWSKI, Adam, *Der Oelmotor.*

LE GALLOU, Y., *Le Moteur Diesel,* 1931.

MEYER-DELFT, P., *Beiträge zur Geschichte des Dieselmotors.*

OSTWALD, W., *Klassiker der Exakten Wissenschaften,* 1892.

PTACZLOWSKY, Ludwig, *Kleine Verbrennungsmaschinen,* 1919.

RICARDO, Harry F., *High Speed Combustion Engines,* 1926.

SASS, F., *Compressorless Diesel Engines,* 1929.

TEN BOSCH, M., *Die Wärmeübertragung,* 1927.

INDEX

Ackroyd Ante Chamber, 152.
Ackroyd-Stewart, 5.
Acro-Bosch, 54.
Acro-Bosch Air Chamber, 167
A.E.C. Diesel Engine, 22, 54, 185.
Air Chambers, 162.
  Broquere, 166.
  Cummins, 170.
  Diesels, 169.
  Ford, 164.
  Lang-Acro, 166.
  Lanova, 172.
  M.A.N., 170.
  Mercedes-Benz, 171.
  Ohlsson, 165.
  Perkins, 173.
  Van Amstel, 165.
Air Chambers, Conclusions of, 173.
Aircraft Diesel Engines, 219.
  Altitude Losses, 222.
  Effect of Air Temperature, 220.
  Fire Hazard, 220.
  Fuel Consumption, 220.
  Fuel Cost, 220.
  Ice Danger, 223.
  Radio Interference, 220.
  Reliability, 219.
  Savings in Fuel Weight, 221.
Aircraft Engines.
  Beardmore, 223.
  Bristol, 225.
  Ceskoslovenska, 226.
  Clerget, 229.
  Coatalen, 227.
  Dechamps, 230.
  Fiat, 230.
  Garuffa, 233.
  Guiberson, 232.
  Junkers, 234.
  Maybach, 238.
  Mercedes-Benz, 239.
  Packard, 244.
Air Injection, 127.
Air Injection Systems, 125.
Air Standard Cycles, 9.
Air Standard Efficiencies, 10.
Albert Machine Design Problems, 318.
Alexander, D. H., 134.
Ante Chamber, 143.
Ante Chambers, 143.
  Ackroyd, 152.
  Beardmore, 147.
  Caterpillar, 147.
  Deutz, 148.
  Hill, 148.
  Koerting, 149.
  Krupp, 150.
  Mercedes-Benz, 150.
  Price, 152.
  Sulzer, 154.
  Tartrais-Peugeot, 154.
  Wolverine, 154.
Appendix, 327.
Associated Equipment Co., 22, 54.
Atimko Injection System, 122.
Atlas-Imperial, Common Rail, 247.
Atomizing, Fuel, 57.
Attendu Open Chamber, 137.
Automotive Diesel Engines, 184.
  A.E.C., 185.
  Armstrong-Saurer, 186.
  Buda, 189.
  Buessing-N.A.G., 190.
  Caterpillar, 191.
  Cummins, 193.
  Deutsche Werke, 194.
  Hercules, 195.
  Junkers, 201.
  Krupp, 203.
  M.A.N., 184, 206.
  Meadows, 207.
  Mercedes-Benz, 208
  Michel, 210.
  Perkins, 211.
  Saurer, 213.
  Tartrais-Peugeot, 217.
  Victor Cub, 217.
  Waukesha, 218.

Balance, 316.
  Dynamic Balance, 317.
  Reciprocating Balance, 318.
  Static Balance, 316.
Barnett, 2.
Barsanti & Matteucci, 3.
Beardmore Ante Chamber, 147.
  Fuel Pump, 92.
Beardsley, E. G., 68.

Becker & Fischer, 51.
Benes Fuel Pump, 92.
Benz Diesel, 8.
Bibliography, 329.
Bielefeld Chamber Design, 10.
Bird, Prof., 11.
Boiling Point of Oils, 12.
B.M.W. Supercharged Diesels, 275.
Bolinders Turbulence Chamber, 156.
Bosch, Fuel Pump, 79.
  Nozzles, 108.
Brotherhood Diesel, 23.
Brown-Boveri Supercharger, 278.
Buchi Supercharger, 275.
Buckeye, 19.
Bureau of Mines, U.S. 20.
Busch-Sulzer, 21.
  Piston, 22.

Carnot, Sadi, 2.
Caterpillar, Diesel Engines, 191.
  Ante Chamber, 147.
  Fuel Pump, 93.
Cetane Rating, 50.
Chamber Designs, Combustion, 137.
  Air Chambers, 162.
  Ante Chambers, 143.
  Odd Chambers, 178.
  Open Chambers, 137.
  Turbulence Chambers, 154.
Chicago-Pneumatic, Fuel Pump Adjustment, 94.
Clerk, 5, 24.
C.L.M. Lille Aircraft Diesel, 236.
Coal Tar Oils, 44.
Combination Automatic-Foot Control, 82.
Combination Pump & Nozzle, 116.
Combustion, 28, 33.
  Chamber Types, 175.
  Chambers, Piston, 294.
  of Carbon, 28.
  of Hydrogen, 29.
  Process, 31.
  with Ante Chamber, 145.
Common Rail & Air Injection Systems, 125.
Comparisons of Chamber Designs, 173.
Compressibility of Fuel Oil, 134.
Compression, 12.
Connecting Rods, 298.
  Aluminum Alloy, 299.
  Dennis, 300.
  Hercules, 300.
  I-section, 299.
Cooling Systems, 313.
  Closed System, 315.
  Direct Cooling, 314.
  Raw Water Open System, 314.
Cooper-Bessemer System, Air Injection, 126.
  Piston, 295.
Critical Compression Ratios, 50.
Cummins Diesel Engine, 193.
Cummins Fuel System, 117.
Cycle of Operation, 23.
Cylinder Blocks & Sleeves, 282.

Daimler-Mercedes, 1.
Davis' & Giffen's Test, 2.
Dechamps, 3.
Deckel-Compur Fuel Pump, 95.
Dennis Connecting Rod, 300.
de Rochas, Beau, 4, 23.
Deutsche Werke Diesel Engine, 194.
Deutz Ante Chamber, 148.
  Fuel Pump, 96.
Diameter, Human Hair vs. Fuel Droplet, 57.
Dicksee, C.B., 23, 35.
Diesel Combustion, 33.
Diesel Cycle, 9, 11, 12.
Diesel, Dr. Rudolf, Frontispiece, 1, 6, 184, 248.
Diesel Engine, Definition, 1.
  Design Features, 282.
Diesel Engine Manufacturer's Association, 312.
Diesels, Glow Head, 137.
Diesel Index, Rating Diesel Fuel, 51.
Diesel Licensees, Great Britain, Switzerland, U. S., 7.
Diesel's Air Chamber Idea, 164.
Doped Fuels, 51.
Dorner Comb. Pump & Nozzle, 117.

Edison, Double Pole Glow Plug, 135.
Effect of Heating of Droplets on Combustion, 74.
Effects of Air Temperature and Density on Ignition Delay, 36.
  of Excess Air, 30.
  of Initial Temperature on Compression, 13.
  of Injection Advance, 35.
  of Injection Timing, 34.
Electron Metal Corp., 298.
Ellenwood, Prof., 30.

Fiat, 230.
First Diesel Engine, 7, 8.
First Diesel-engined Automobile, 7.
Ford's Air Chamber Design, A. E., 164.
Four-Stroke Cycle, 24.
Frey Combination Pump and Nozzle, 118.
Fuel Atomization, 57.

Fuel Droplet (Diameter), 57.
Fuel Injection, Air Injection, 127.
Fuel Injection, Common Rail & Air Injection, 125.
  Cooper-Bessemer System, 126.
  Superior System, 125.
Fuel Injection Nozzles, 105.
Fuel Oil, Compressibility of, 134.
Fuel Oils, 41, 45.
Fuel Pipes, Pressure Waves, 131.
Fuel Pumps, 78.
  Beardmore, 92.
  Benes, 92.
  Bosch, 79.
  Caterpillar, 93.
  Chicago Pneumatic, 94.
  Deckel-Compur, 95.
  Deutz, 95.
  Fairbanks-Morse, 97.
  Ganz-Jendrassik, 99.
  Junkers, 99.
  Koerting, 100.
  M. L., 103.
  McLaren-Benz, 101.
  Ricardo, 104.
  Timken, 84.
Fuel Tubing, 128.
Fuels, Doped, 51.

Ganz-Jendrassik Fuel Pump, 99.
Garuffa, 232.
Gasoline Engine, 23.
Gasoline Engine Combustion, 31.
General Motors, 257.
Geological Survey, U. S., 56.
Glow Plugs, Edison, 134.
  Lodge, 135.
  Starting Without, 135.
Governor, The, 81.
Governors, 309.
Graz-Hesselman Diesel, 23.
Guiberson, 232.

Hargreaves, 5.
Heating Values of Fuel Oil, 42.
Henschel Diesel Engine Tests, 297.
Hercules Connecting Rod, 300.
  Ante-Chamber, 148.
  Crankshafts, 304.
  Diesel Engine, 195.
Hesselman, 7, 78.
  Combination Pump and Nozzle, 119.
  Nozzle, 109.
Hill, Ante-chamber, 148.
  Opposed Piston Diesel, 260.
Hispano-Suiza, 229.
Holfelder, Dr. O., 36, 38, 39, 145.
Hornsby-Ackroyd, 6.
Human Hair (Diameter), 57.
Huyghens, 1.

Ignition Temperature, 46.
  Quality of Oils, 49.
Indicator Diagrams, 25.
Individual Fuel Pump Construction, 91.
Ingersoll-Rand, 261.
Injection Advance Device, 81.
International Harvester Diesels, 199.
I-Section Connecting Rod, 299.

Jendrassik, Heating Method, 136.
Junkers Diesel, 23, 234.
  Aviation Engines, 68.
  Fuel Pump, 99.
  Nozzle, 110.
  Open Chamber, 139.

Kaemper Turbulence Chamber, 157.
Koerting, Ante Chamber, 149.
  Fuel Pump, 100.
Kreutzer-M.W.M. Air Chamber, 167.
Krupp, 7.
  Ante Chamber, 150.
  Open Chamber, 139.

Lang-Acro Air Chamber, 166.
Lang, Franz, 7, 78, 185.
Lanoir, 3.
Lay Turbulence Chamber, 159.
Lebon, 2.
Lewis, Prof. F. M. T., 323.
Leyland Open Chamber, 141.
Lister Diesel, 23.
Lister Variable Chamber, 183.
Lodge, Single Pole Glow Plug, 135.

MacCallum, 144.
M.A.N., 7.
  Air Chamber, 26, 167.
  Diesel, 23, 206.
  Nozzles, 111.
  Open Chamber, 141.
Marine Diesels, 246.
Maybach, 237.
  Open Chamber, 142.
McKechnie Nozzle, 111.
McLaren-Benz Fuel Pump, 102.
Meadows, 206.
Medium & Low Speed Diesel Engines, 245.
  Atlas, 246.
  Buckeye, 246.
  Busch-Sulzer, 248.
  Chicago-Pneumatic, 252.
  Cooper-Bessemer, 253.
  General Motors, 257.
  Hill, 260.
  Ingersoll-Rand, 261.
  Nelseco, 252.
  Superior, 264.

Medium & Low Speed Diesel Engines, (*Cont.*)
Winton-G.M., 268.
Worthington, 269.
Mercedes-Benz, 21.
Air Chamber, 171, 185.
Diesel, 208.
Michel, 210.
Open Chamber, 142.
Miller & Beardsley, 73.
Minimum Speed Control, 82.
Miscellaneous, 309.
M. L. Fuel Pump, 103.
Modified Diesel-Otte Cycle, 9.
Moore & Kaye, 51.
Multi-Cylinder Engine, 319.
Multi-Hole Nozzle Test, 107.
Maximum Speed Control, 82.
M.W.M. Nozzle, 112.

N.A.C.A., Diesel Test Engine, 277.
Nozzle, 99.
Napier, 236.
National Supply, Superior System, 125.
Nelseco Diesel Engine, 262.
Piston & Connecting Rod, 297.
Nozzle, Design & Penetration, 73.
Nozzles, Open vs. Closed, 106.
Atimko Combination Pump & Nozzle, 122.
Bosch, 108.
Combination Pump & Nozzle, 116.
Cummins Injection System, 118.
Dorner Pump-Nozzle, 117.
Frey Combination Pump & Nozzle, 118.
Hesselman, 109.
Hesselman Combination Pump & Nozzle, 119.
Junkers, 110.
M.A.N., 111.
M.W.M., 112.
McKechnie, 111.
N.A.C.A., 112.
R.A.E., 113.
Ricardo, 113.
Spiral Grove, 114.
Tartrais-Peugeot, 114.
Typical Air Injection Nozzle, 117.
Worthington, 115.
Winton Combination Pump & Nozzle, 120.

Odd Chamber Designs, 178.
Bielefeld, 179.
Climax, 180.
Seiliger, 180.
Variable, Lister, 182, 183.
Oil, Diesel Specifications, 45.
Fuel, Ignition at Atmospheric Pressure, 47.
Vegetable, 44.
Oils, American, 44.
Beaumont, Tex., 44.
Oils, Coal Tar, 44.
Ignition Quality of, 49.
Shale, 55.
Oils, Colinga, Cal., 44.
Mexican Crude, 45.
Pennsylvania Crude, 44, 46.
Pennsylvania Light, 44.
West Virginia, 45.
Oils, Crude, 46.
Ohio, 46.
Oklahoma, 46.
Kansas, 46.
Wyoming, 46.
Opposition to Diesel's Engine, 7.
Otto, 4.
Cycle, 9, 11, 12.

Packard Aviation Diesel, 244.
Packard Open Chamber, 143.
Penetration and Compression Pressure, 64.
and Injection Pressure, 64.
Perkins Air Chamber, 173.
Perkins Diesel Engine, 211.
Permissible Droplet Size, 63.
Petroleum Oils, 41.
Physical Properties (of fuel oils), 42.
Piston Combustion Chambers, 294.
Busch Sulzer Trunk, 295.
Cooper-Bessemer, 295.
Displacement, 328.
Medium and Low Speed Engines, 294.
Nelseco Piston and Connecting Rod, 297.
Vesta Piston, 291.
Pistons, 288.
Plugs, Glow, 134.
Pope & Murdock, 50.
Pressure Waves, Fuel Pipes, 131.
Price Ante Chamber, 152.
Priestman, 5.
Problems, 27, 40, 56, 325.
Proportions by Weight, 29.
Pump and Nozzle, Combination, 116.
Atimko, 122.
Cummins, 117.
Dorner, 117.
Frey, 118.
Hesselman, 119.
Winton, 120.
Pump Outlet Valve, 80.
Pumps, Fuel, 78.

R.A.E. Nozzle, 113.
Railcar & Locomotive Diesels, 246.
Renault V-16 Diesel Engine, 211.
Ricardo, Harry R., 20.
  Comet Turbulence Chamber, 160.
  Fuel Pump, 104.
  Nozzle, 113.
  Rotary Swirl Turbulence Chamber, 160.
Roots-Connersville Supercharger, 280.

Sass, Dr. Friedrich, 61.
Saurer, 184.
  Open Chamber, 143.
Seiliger Chamber Design, 180.
Shale Oil, 56.
Size of Droplets, 57.
Societe St. Georgen, 184.
Spanogle, John A., 35, 275.
Spiral Grove Nozzles, 114.
Starting without Glow Plugs, 135.
Sterling, 215.
Stewart & Binney Ante Chamber, 143, 144.
Street, 1.
Sulzer Bros. Ante Chamber, 154.
Superchargers, 27, 273.
  Buchi, 275.
  Brown-Boveri, 278.
  G. E., 272.
  Pratt & Whitney, 274.
  Roots-Connersville, 280.
Superior Diesel, 264.
  System, Common Rail, 125.

Tartrais, 184.
Tartrais-Peugeot Ante Chamber, 154.
  Nozzle, 114.
Tausz & Schulte, 46.
Thermal Efficiency, 21.
Thermodynamics, 9.
Timken Fuel Pump, 84.
Torsional Vibration, 322.
Tubing, Fuel, 128.
Turbulence, 76.
  Bolinders, 156.
  Chambers, 154.
  Hercules, 157.
  Kaemper, 157.
  Lay, 159.
  Oberhaensli, 159.
  Ricardo Comet, 160.
  Victor Cub, 161.
Two-stroke Cycle, 25.
Typical American Oils, 44.

Valves, 304.
Van Amstel, A. F. Air Chamber, 165.
Variable Chambers, 182.
Vegetable Oils, 44.
Vesta Aluminum Piston, 291.
Vibration, 321.
  Prevention, 324.
  Torsional, 322.
Viscosity Gravity Constant, 51.

Waukesha Motor Company, 283.
Wild, J. E., 107.
Winton, 120.
Winton-General Motors, 268
Wöltjen, C., 58, 66.
Wolverine Ante Chamber, 154.
Worthington Dies, 269.
  Nozzle, 115.

Recent Van Nostrand Books on Engineering and Related Subjects

DIESEL ENGINES. *By* B. J. VON BONGART, *Consulting Engineer.*

STEAM AND GAS ENGINEERING. A Text Covering Power Generating Apparatus Utilizing Energy Released by the Combustion of Fuels. *By* T. E. BUTTERFIELD, *Professor of Heat Power Engineering at Lehigh University.* ALEXANDER W. LUCE *and* B. H. JENNINGS, *Professors, Mechanical Engineering, Lehigh University.* Third Edition. $4.50

ANALYSIS AND DESIGN OF STEEL STRUCTURES. *By* A. H. FULLER, *Professor of Civil Engineering and* FRANK KEREKES, *Professor of Structural Engineering, Iowa State College.* $5.00

VIBRATION PROBLEMS IN ENGINEERING. *By* S. TIMOSHENKO, *Professor of Engineering Mechanics, University of Michigan.* $5.50

STRENGTH OF MATERIALS. *By* S. TIMOSHENKO.
Part I. *Elementary Theory and Problems.* $3.50
Part II. *Advanced Theory and Problems.* $4.50

ELEMENTS OF STRENGTH OF MATERIALS. *By* S. TIMOSHENKO *and* GLEASON H. MAC CULLOUGH, *Professor of Engineering Mechanics at Worcester Polytechnic Institute.* $3.25

APPLIED KINEMATICS. For Students and Mechanical Designers. *By* J. HARLAND BILLINGS, *Professor of Mechanical Engineering, Drexel Institute.* $2.50

REINFORCED CONCRETE. Mechanics and Design. *By* R. A. CAUGHEY, *Professor of Structural Engineering, Iowa State College.* $3.75

ELEMENTARY MECHANISM. *By* PHILIP K. SLAYMAKER, *Professor of Machine Design, University of Nebraska.* $2.25

MECHANICS FOR ENGINEERS; Statics and Kinetics. *By* J. C. SMALLWOOD, *Associate Professor of Mechanical Engineering, and* F. W. KOUWENHOVEN, *Johns Hopkins University.* $2.50

MECHANICAL LABORATORY METHODS. The Testing of Instruments and Machines in the Mechanical Engineering Laboratory, and in Practice. *By* J. C. SMALLWOOD *and* F. W. KEATOR, *Sheffield Scientific School, Yale University.* Second Edition. $3.50

ELEMENTS OF PRACTICAL MECHANICS. *By* C. R. MAC INNES, *Late Professor of Mathematics, Princeton University.* $2.25

THE ELEMENTS OF MACHINE DESIGN. *By* S. J. BERARD, *Associate Professor of Engineering Drawing, Brown University, and* E. O. WATERS, *Associate Professor of Mechanical Engineering, School of Engineering, Yale University.* Second Edition. $3.25

MACHINE DESIGN PROBLEMS. *By* S. J. BERARD *and* E. O. WATERS. $1.50

DRAFTING FOR ENGINEERS. A Textbook of Engineering Drawing for Colleges and Technical Schools. *By* C. L. SVENSEN, *Chairman, Texas State Board of Registration for Professional Engineers, Consulting Engineer. Formerly Head of Department of Engineering Drawing, Texas Technological College.* Second Edition. $3.00

MACHINE DRAWING. *By* C. L. SVENSEN. Second Edition. $2.25

CONSTRUCTION DRAWING. A Textbook of Architectural Drawing for the Building Trades. *By* JOSEPH BRAHDY *and* SAMUEL LANDSMAN. $2.50

PERSPECTIVE. *By* BEN J. LUBSCHEZ. Fourth Edition. $2.00

POWER PLANT ENGINEERING AND DESIGN. A Text for Engineers and Students of Engineering Covering the Theory and Practice of Stationary Electric Generating Plants. *By* FREDERICK T. MORSE, *Member of the Faculty of Engineering, University af Virginia.* $6.50

DESCRIPTIVE GEOMETRY. *By* C. H. SCHUMANN, *Associate Professor and Executive Officer, Department of Drafting, Columbia University.* Third Edition. $2.75

DESCRIPTIVE GEOMETRY PROBLEMS. *By* C. H. SCHUMANN, JR., *and* F. H. LEE, *Columbia University.* Second Edition. $1.90

HANDBOOK OF ENGINEERING MATHEMATICS. *By* W. E. WYNNE, *Late of Mass. Inst. of Technology, and* W. SPRARAGEN, *Secretary, Division of Engineering and Industrial Research, National Research Council.* Second Edition. $2.50

PROBABILITY AND ITS ENGINEERING USES. *By* T. C. FRY. $7.50

Van Nostrand books sent on approval to residents of the United States and Canada. General Catalog sent free upon request.

PRICES SUBJECT TO CHANGE WITHOUT NOTICE